REVISIONS				
REV	DESCRIPTION	DATE	APPROVED	APPROVED
D	INITIAL WULFSBERG RELEASE PER DCN W1894	12-19-02	V. Wallace	

NOTES:

(1) UNLESS NOTED OTHERWISE ALL NEW WIRE TO MEET MIL-W-22759/16 OR LATER REVISION. ALL SHIELDED WIRE TO BE MIL-C-27500E WITH SHIELDS TYPE (T) AND JACKE6S TYPE (14). INSTALL WIRING FOLLOWING EXISTING WIRE BUNDLES WHERE PRACTICAL. FOR ADDITIONAL BONDING AND GROUNDING DETAILS REF: AC43-13-1B CHAPTER 11, SECTIONS 9,10,11,& 15.

(2) GROUND NOTES

A DC GND C SIGNAL GND
B AC GND D AIRFRAME & SHIELD GND
XX CHASSIS GND

GROUNDS TO BE AS SHORT AS POSSIBLE UNLESS OTHERWISE INDICATED. GROUNDS UNDER 6 INCHES IN LENGTH DO NOT REQUIRE A WIRE NUMBER. SHIELD PREPARATION SHOULD NOT EXCEED 3 INCHES FROM CONNECTOR. SHIELD GROUNDS MAY BE ACCOMPLISHED BY DAISY CHAINING. SPLICING OR INDIVIDUALLY GROUNDING SHIELD TO APPROPRIATE GND DEVICE.

(3) XXX DENOTES REFERENCE TO DWG XXX XXX( ).

(4) ⬡ REFERS TO LIKE LETTER IN SYMBOL THIS DWG.

(5) ALL WIRES 22AWG UNLESS OTHERWISE SPECIFIED.

(6) — — — — — — DENOTES EXISTING AIRCRAFT WIRING OR COMPONENT.

(7) —·—·—·— DENOTES OPTIONAL EQUIPMENT.

8. EFIS MASTER SWITCHES IS LOCATED ON PILOT'S INSTRUMENT PANELS OR OTHER PROMINENT/ACCESSIBLE LOCATION.

9. REFERENCE FUEL FLOW WIRING TO SHADIN ADC MANUAL 962830A-1-S-8.

10. THE WIRE GUAGE OF THE EFIS DC FEEDERS MUST MATCH THE A/C 28VDC OR 14VDC FEEDER

11. CONNECT TO EXISTING A/C ANNUNCIATOR DIM BUS. IF AN EXISTING BUS IS NOT AVAILABLE, WIRE AS SHOWN.

12. CONNECT TO EXISTING A/C ANNUNCIATOR TEST BUS. IF AN EXISTING BUS IS NOT AVAILABLE, WIRE AS SHOWN.

13. IF INSTALLED IN 14 VOLT AIRCRAFT , THE LISTED ITEM NUMBERS PART NUMBERS WILL CHANGE AS SHOWN.

14. EFIS BAT CIRCUIT BREAKER TO BE MOUNTED ON BATTERY RACK

15. CONNECT TO NO. 2 GEN BUS IF AVAILABLE, IF NOT CONNECT TO THE NO. 1 GEN BUS

16. OPTIONAL EQUIPMENT IS NOT USED IN ALL CONFIGURATIONS.

17. BACKUP BATTERY IS OPTIONAL AND IS NOT USED IN ALL CONFIGURATIONS.

18. INSTALL ONLY THE CIRCUIT BREAKER FOR THE SPECIFIED CONFIGURATION.

19. PAGE NO. 9 IS FOR (TYPICAL) INFORMATON ONLY.

20. REF: COMPONENT INSTALL DRAWING NO. 150-045051, FABRICATION OF BATTERY MOUNT.

(21) SMALL PARTS AND ELECTRICAL COMPONENTS REQUIRED FOR INSTALLATION THAT ARE NOT SPECIFICALLY CALLED OUT IN PARTS LIST, SHALL MEET THE REQUIREMENTS FOR AEROSPACE USE AS 'ACCEPTABLE PARTS' OR 'STANDARD PARTS'. SELECTION OF THESE PARTS SHALL BE IN ACCORDANCE WITH GUIDANCE PROVIDED IN FAA ADVISORY CIRCULAR 20-62D DATED 5/24/96 (OR LATER REVISION)

22. CONNECT TO EXISTING AIRCRAFT SYSTEMS AS SHOWN IN VENDOR'S MANUAL.

23. IN 14 VOLT AC WIRE 1PS103A10 IS CONNECTED TO THE POSITIVE BATTERY TERMINAL WITH WIRE 1PS101AA10.

24. IF A/C HAS TWO DC BUSES THESE COMPONENTS WILL BE POWERED FROM THE #2 BUS AS SHOWN ON SH 7 EXCEPT CONFIGURATION 103.

25. IF 15 AMP TOGGLE BREAKER IS USED AS A EFIS MASTER, SHEET 4 AND 5 ARE NOT USED. INSTALL EFIS PWR ON ANNUNICATORS AS REQUIRED. ANNUNICATOR POWER CIRCUIT BREAKER IS POWERED FROM EFIS BUS.

26. JUMPER NOT USED IF A/C HAS 2 DC BUSES.

STANDARD CONFIGURATION

X = PAGE IS USED FOR THIS CONFIGURATION
- = PAGE IS NOT USED FOR THIS CONFIGURATION

CONFIG	PAGES OF THIS DWG USED									
	1	2	3	4	5	6	7	8	9	10
101	X	X	-	X	-	X	-	X	X	-
102	X	X	-	X	-	X	-	X	X	-
103	X	X	-	X	-	X	-	X	X	-
104	X	X	-	X	-	X	-	X	X	-
105	X	X	-	X	X	X	X	X	X	-
106	X	X	-	X	-	X	-	X	X	-
107	X	X	-	X	X	X	X	X	X	-

24 25 19

OPTIONAL CONFIGURATION WITH BACKUP BATTERY 17

X = PAGE IS USED FOR THIS CONFIGURATION
- = PAGE IS NOT USED FOR THIS CONFIGURATION

CONFIG	PAGES OF THIS DWG USED									
	1	2	3	4	5	6	7	8	9	10
101	X	-	X	-	-	X	-	X	X	X
102	X	-	X	-	-	X	-	X	X	X
103	X	-	X	-	-	X	-	X	X	X
104	X	-	X	-	-	X	-	X	X	X
105	X	-	X	-	X	X	X	X	X	X
106	X	-	X	-	-	X	-	X	X	X
107	X	-	X	-	X	X	X	X	X	X

24 25 19

THIRD ANGLE PROJECTION

TOLERANCES: (ALL DIMENSIONS ARE IN INCHES UNLESS OTHERWISE SPECIFIED.) FRACTIONS ±X DECIMALS .XX± .XXX± ANGLES ±X°

MATERIAL

FINISH

NEXT ASSEMBLY | FINAL ASSEMBLY

APPLICATION

DO NOT SCALE DRAWING

TYPED SIGNATURES INDICATE APPROVAL. HANDWRITTEN SIGNATURE APPROVAL OF THIS DOCUMENT IS ON FILE AT WULFSBERG ELECTRONICS, PRESCOTT, ARIZONA.

APPROVALS		DATE
DRAWN	L. Harper	12-19-02
ENGINEER	J. Pickstine	12-19-02
CHECKED	R. Harper	12-19-02
ISSUED	R. Harper	12-19-02

Wulfsberg Electronics
A Chelton Group Company

W/D AIRCRAFT SYSTEM INTERFACE

SIZE	CAGE CODE	DOCUMENT NO.	REV.
B	1B7G3	702-045251	D

SCALE = NONE SHEET = 1 OF 10

DWG NO. 702-045251 SH. 1 REV. D

THIS DOCUMENT CONTAINS PROPRIETARY INFORMATION OF WULFSBERG ELECTRONICS NEITHER RECEIPT NOR POSSESSION THEREOF CONFERS ANY RIGHT TO REPRODUCE OR USE, OR DISCLOSE, IN WHOLE OR IN PART, ANY SUCH INFORMATION WITHOUT WRITTEN AUTHORIZATION FROM WULFSBERG ELECTRONICS.

13

PARTS LIST - 14 VDC AIRCRAFT

ITEM	PART NO.	NOMENCLATURE	SPEC/VENDOR
16	30628-105 ON, BATT	ANNUNCIATOR	KORRY
15	30628-102 EFIS, PWR, ON	ANNUNCIATOR	KORRY
13	KC-D4R	RELAY 12V 3P 25AMP	LEACH
12	SO-1057-8912	RELAY SOCKET	LEACH
10	1N5338	ZENER DIODE	DIGIKEY
04	7274-11-5	CIRCUIT BREAKER	KLIXON

STANDARD CONFIGURATION

25

-107	-106	-105	-104	-103	-102	-101	ITEM	PART NO.	NOMENCLATURE	SPEC/VENDOR
AR	AR	AR	AR	AR	AR	AR	20	7270-1-15	TOGGLE BREAKER	KLIXON
1	1	1	1	1	1	1	19	DCR-1A-03	TERMINAL RAIL	QPL
1	1	1	1	1	1	1	18	M81714/60-22-02	TERMINAL BLOCK	QPL
2	1	2	1	1	1	1	17	M81714/60-22-01	TERMINAL BLOCK	QPL
2	1	2	1	1	1	1	16	30628-005 ON, BATT	ANNUNCIATOR	KORRY
2	1	2	1	1	1	1	15	30628-002 EFIS, PWR, ON	ANNUNCIATOR	KORRY
2	1	2	1	1	1	1	14	8511K9	SWITCH 2P TOGGLE	EATON
2	1	2	1	2	1	1	13	KC-D4N	RELAY 28V 3P 25AMP	LEACH
2	1	2	1	2	1	1	12	SO-1057-8912	RELAY SOCKET	LEACH
5	2	5	2	2	2	2	11	TJSE20707	DIODE MODULE	PCD
1	1	1	1	1	1	1	10	1N5348B (OR EQUIVALENT)	ZENER DIODE	DIGIKEY
1	1	1	1	1	1	1	09	CKN 1112-ND (OR C&K 7201K2ZDE)	SWITCH	DIGIKEY
4	4	4	4	3	3	2	08	CKN 4011-ND (OR C&K 8121SACGE)	SWITCH (PUSH BUTTON)	DIGIKEY
AR	AR	AR	AR	AR	AR	AR	07	201B (OR CHELTON FF01)	FUEL FLOW TRANS.	FLOSCAN
4	4	4	2	2	2	2	06	7274-11-10	CIRCUIT BREAKER	KLIXON
AR	AR	AR	AR	AR	AR	AR	05	7274-11-15	CIRCUIT BREAKER	KLIXON
4	4	3	3	2	2	1	04	7274-11-3	CIRCUIT BREAKER	KLIXON
5	3	5	3	4	3	3	03	7274-11-2	CIRCUIT BREAKER	KLIXON
6	3	6	3	6	3	3	02	7274-11-1	CIRCUIT BREAKER	KLIXON
						-	01	-	AIRCRAFT SYSTEM INTERFACE	-

NOTES: SEE SHEET 1.

PROPRIETARY NOTICE ON TITLE PAGE APPLIES.

Wulfsberg Electronics
A Chelton Group Company

SIZE	CAGE CODE	DOCUMENT NO.	REV.
D	1B7G3	702-045251	C

SCALE = NONE | SHEET = 2 OF 10

DWG NO. 702-045251 | SH 2 | REV C

PARTS LIST - 14 VDC AIRCRAFT

13

ITEM	PART NO.	NOMENCLATURE	SPEC/VENDOR
23	(TO BE FABRICATED)	BATTERY MOUNT	-
22	NA	-	-
21	PS12180	12V BATTERY	POWER SONIC
20	30628-106 BAT, ON/BAT, ARM	ANNUNCIATOR	KORRY
16	30628-105 ON/BATT	ANNUNCIATOR	KORRY
15	30628-102 EFIS, PWR, ON	ANNUNCIATOR	KORRY
13	KC-D4R	RELAY 12V 3P 25AMP	LEACH
12	SO-1057-8912	RELAY SOCKET	LEACH
10	1N5338	ZENER DIODE	DIGIKEY

20 17

OPTIONAL CONFIGURATION WITH BACKUP BATTERY

-107	-106	-105	-104	-103	-102	-101	ITEM	PART NO.	NOMENCLATURE	SPEC/VENDOR
							25			
AR	AR	AR	AR	AR	AR	AR	24	7270-1-15	CIRCUIT BRKR TOGGLE	KLIXON
AR	AR	AR	AR	AR	AR	AR	23	100-1035-01	RACK	SECURE PLANE
AR	AR	AR	AR	AR	AR	AR	22	345-111-01	CONNECTOR	SECURE PLANE
AR	AR	AR	AR	AR	AR	AR	21	100-2410-01	XL 2410 BATTERY	SECURE PLANE
AR	AR	AR	AR	AR	AR	AR	20	30628-006 BAT, ON/BAT, ARM	ANNUNCIATOR	KORRY
1	1	1	1	1	1	1	19	DCR-1A-3	TERMINAL RAIL	QPL
1	1	1	1	1	1	1	18	M81714/60-22-02	TERMINAL BLOCK	QPL
2	1	2	1	1	1	1	17	M81714/60-22-01	TERMINAL BLOCK	QPL
2	1	2	1	1	1	1	16	30628-005 ON, BATT	ANNUNCIATOR	KORRY
2	1	2	1	1	1	1	15	30628-002 EFIS, PWR, ON	ANNUNCIATOR	KORRY
2	1	2	1	1	1	1	14	8511K9	SWITCH 2P TOGGLE	EATON
2	1	2	1	1	1	1	13	KC-D4N	RELAY 28V 3P 25AMP	LEACH
2	1	2	1	1	1	1	12	SO-1057-8912	RELAY SOCKET	LEACH
5	3	5	3	3	3	3	11	TJSE20707	DIODE MODULE	PCD
2	2	2	2	2	1	1	10	1N5348B (OR EQUIVALENT)	ZENER DIODE	QPL
1	1	1	1	1	1	1	09	CKN 1125-ND	SWITCH	DIGIKEY
4	4	4	4	3	3	2	08	CKN 4011-ND	SWITCH (PUSH BUTTON)	DIGIKEY
AR	AR	AR	AR	AR	AR	AR	07	201B (OR CHILTON FF01)	FUEL FLOW TRANS.	FLOSCAN
3	1	3	1	1	1	1	06	7274-11-10	CIRCUIT BREAKER	KLIXON
2	2	2	2	2	2	2	05	7274-11-15	CIRCUIT BREAKER	KLIXON
4	4	3	3	2	2	1	04	7274-11-3	CIRCUIT BREAKER	KLIXON
5	3	5	3	4	3	3	03	7274-11-2	CIRCUIT BREAKER	KLIXON
6	3	6	3	6	3	3	02	7274-11-1	CIRCUIT BREAKER	KLIXON
						-	01	-	AIRCRAFT SYSTEM INTERFACE	-

17

NOTES: SEE SHEET 1.

PROPRIETARY NOTICE ON TITLE PAGE APPLIES.

Wulfsberg Electronics
A Chelton Group Company

SIZE	CAGE CODE	DOCUMENT NO.	REV.
D	1B7G3	702-045251	C

SCALE = NONE SHEET = 3 OF 10

DWG NO. 702-045251 SH 3 REV C

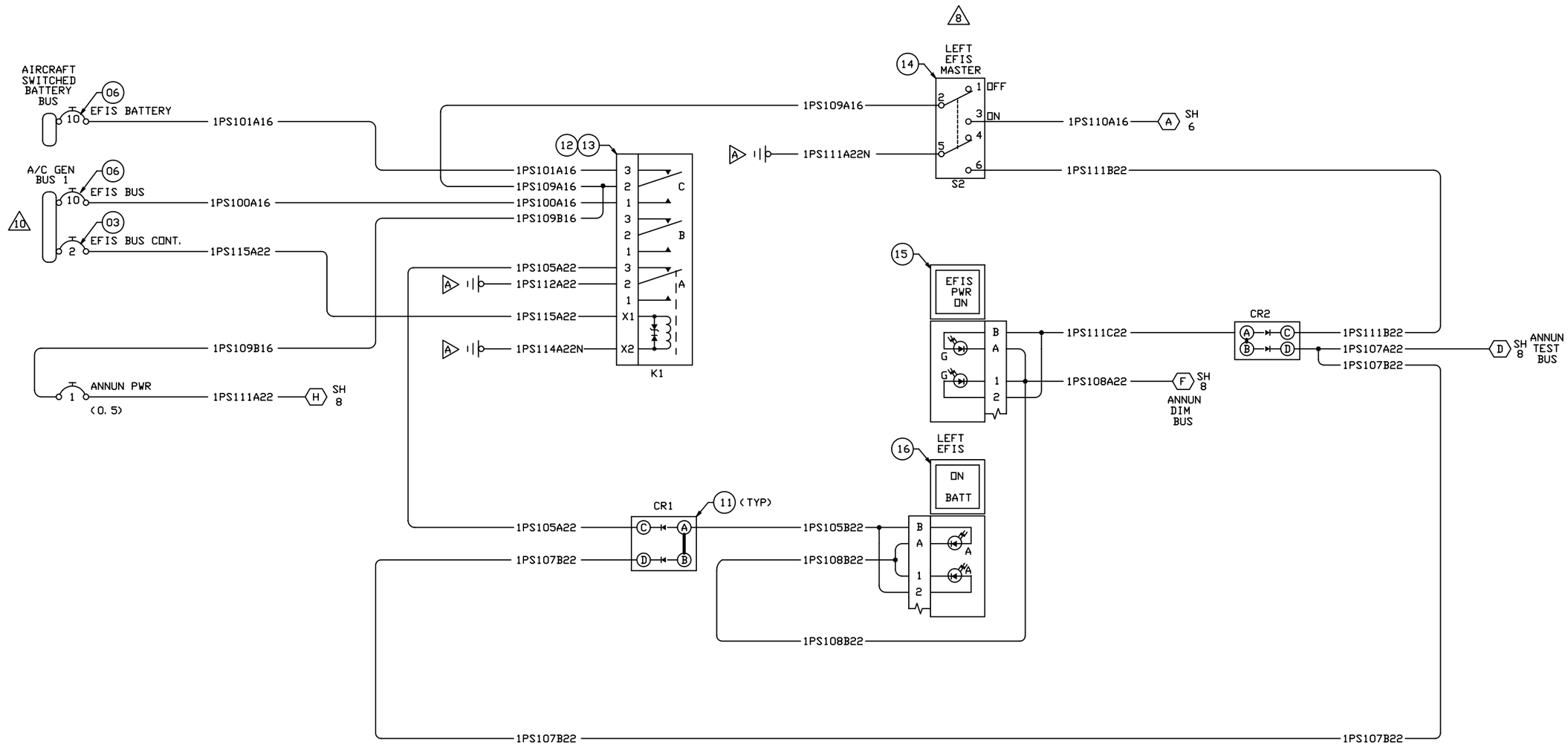

NOTES: SEE SHEET 1.

PROPRIETARY NOTICE ON TITLE PAGE APPLIES.

Wulfsberg Electronics
A Chelton Group Company

SIZE	CAGE CODE	DOCUMENT NO.	REV.
D	1B7G3	702-045251	C
SCALE = NONE			SHEET = 4 OF 10

DWG NO. 702-045251 SH 4 REV. C

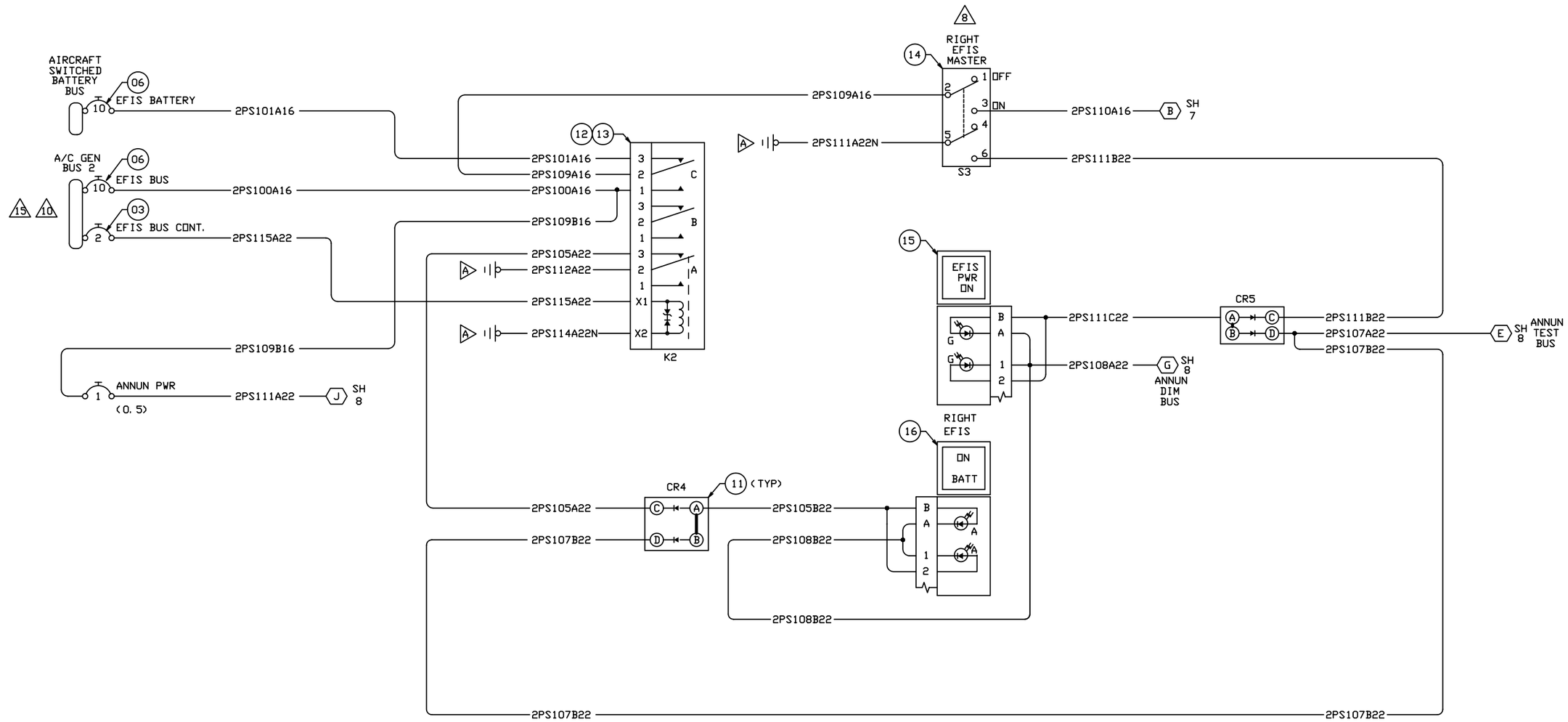

NOTES: SEE SHEET 1.

PROPRIETARY NOTICE ON TITLE PAGE APPLIES.

Wulfsberg Electronics
A Chelton Group Company

SIZE	CAGE CODE	DOCUMENT NO.	REV.
D	1B7G3	702-045251	B
SCALE = NONE			SHEET = 5 OF 10

DWG NO. 702-045251 SH 5 REV B

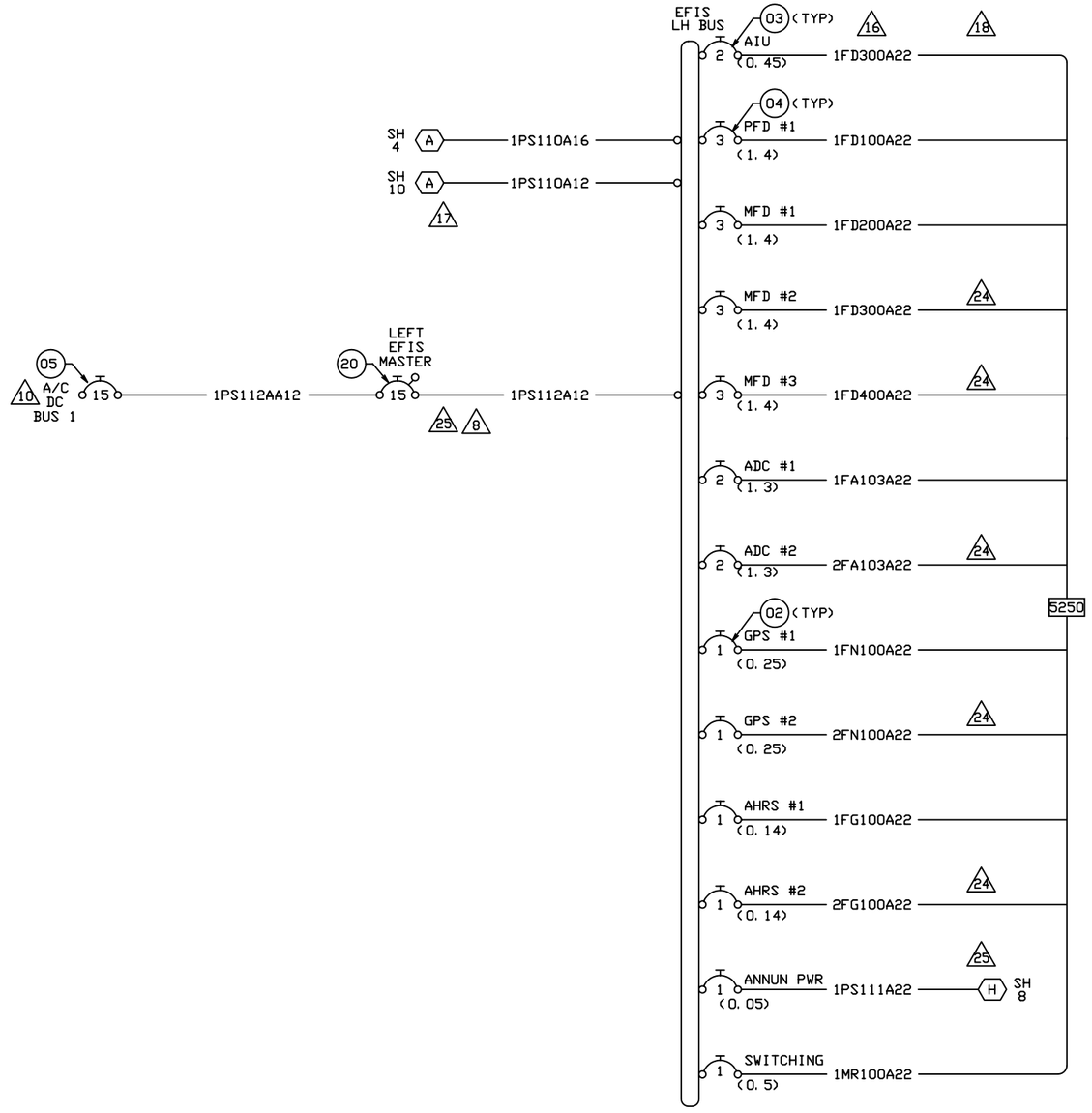

NOTES: SEE SHEET 1.

PROPRIETARY NOTICE ON TITLE PAGE APPLIES.

Wulfsberg Electronics
A Chelton Group Company

SIZE	CAGE CODE	DOCUMENT NO.	REV.
D	1B7G3	702-045251	C
SCALE = NONE			SHEET = 6 OF 10

DWG NO. 702-045251 SH. 6 REV. C

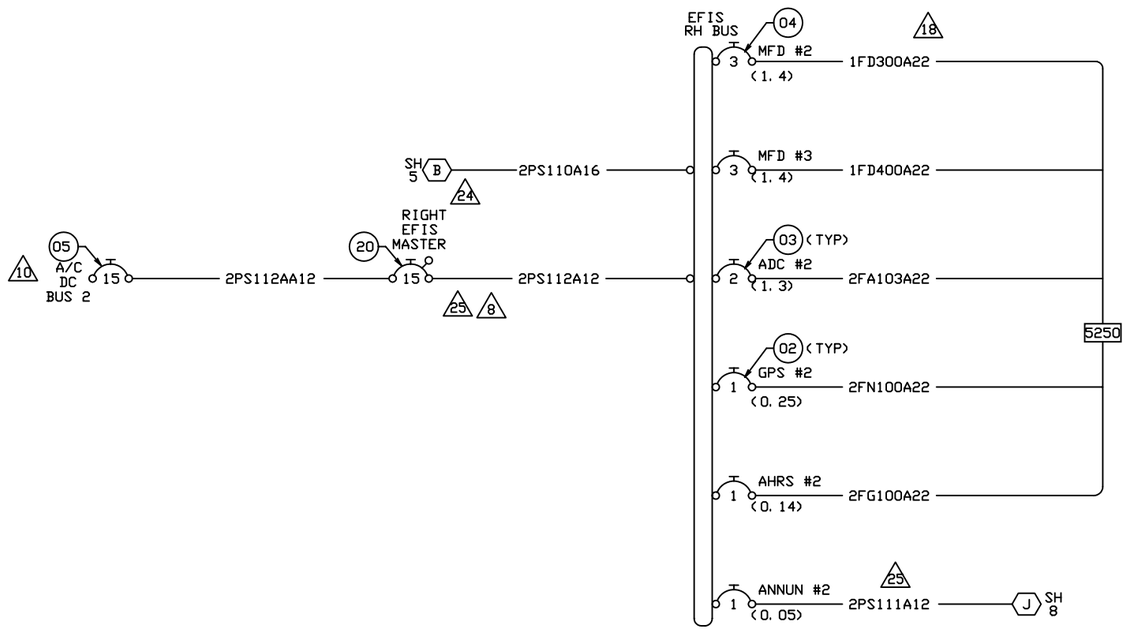

NOTES: SEE SHEET 1.

PROPRIETARY NOTICE ON TITLE PAGE APPLIES.

Wulfsberg Electronics
A Chelton Group Company

SIZE	CAGE CODE	DOCUMENT NO.	REV.
D	1B7G3	702-045251	C
SCALE = NONE			SHEET = 7 OF 10

DWG NO. 702-045251 SH. 7 REV. C

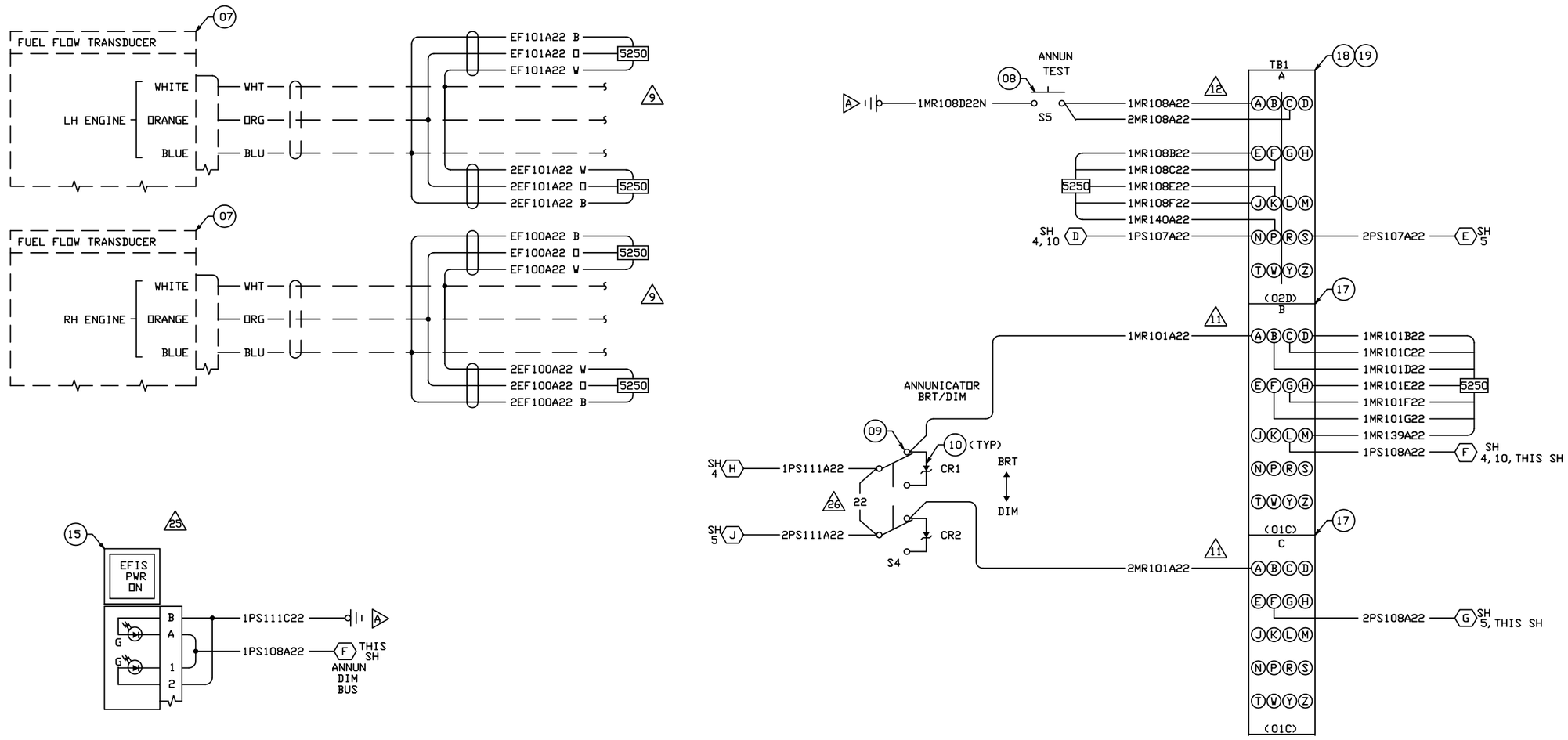

NOTES: SEE SHEET 1.

PROPRIETARY NOTICE ON TITLE PAGE APPLIES.

Wulfsberg Electronics
A Chelton Group Company

SIZE	CAGE CODE	DOCUMENT NO.	REV.
D	1B7G3	702-045251	C
SCALE = NONE			SHEET = 8 OF 10

DWG NO. 702-045251 | 7 | 8 | REV. C

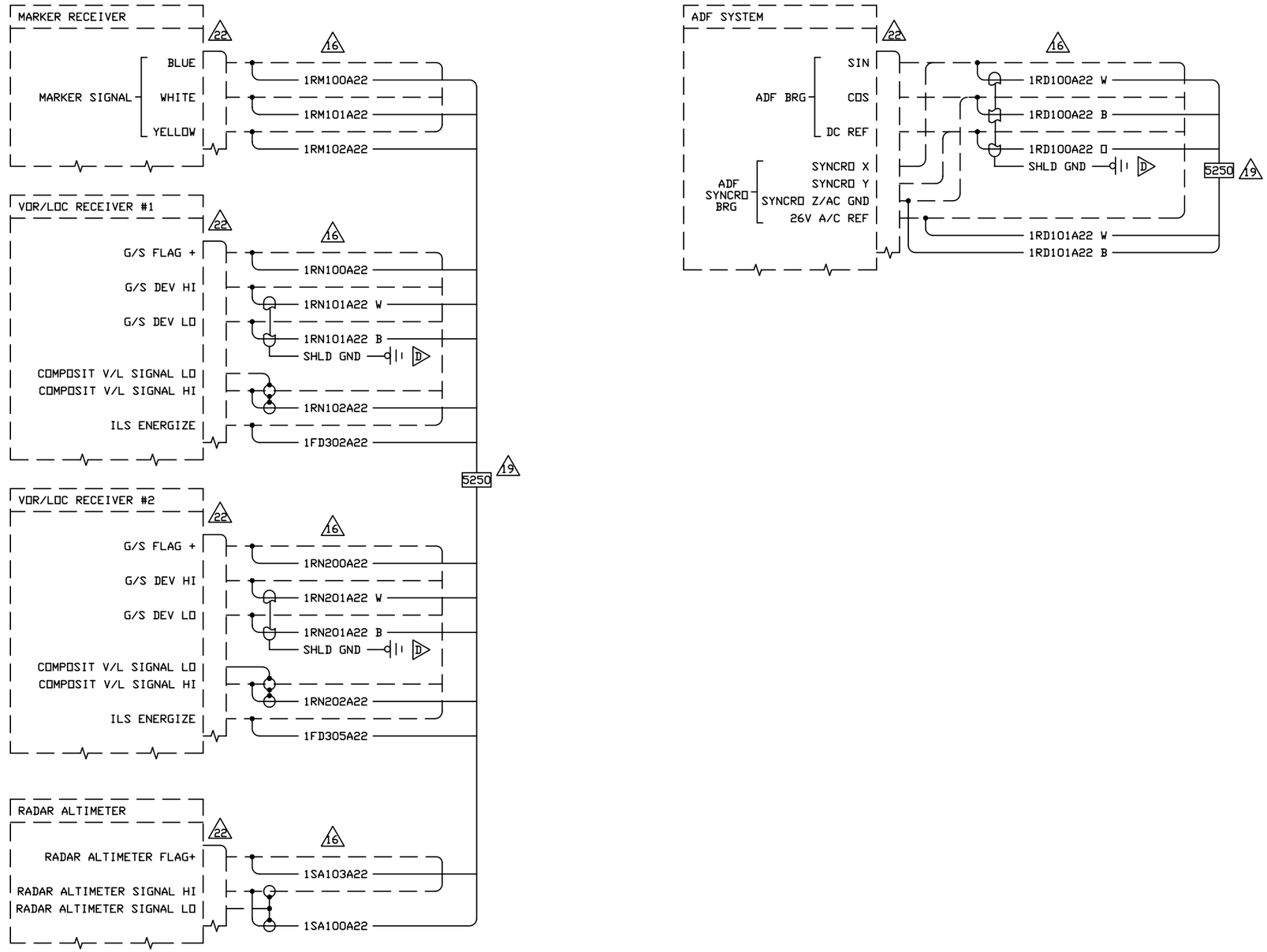

NOTES: SEE SHEET 1.

PROPRIETARY NOTICE ON TITLE PAGE APPLIES.

Wulfsberg Electronics
A Chelton Group Company

SIZE	CAGE CODE	DOCUMENT NO.	REV.
D	1B7G3	702-045251	C
SCALE = NONE			SHEET = 9 OF 10

DWG. NO. 702-045251 SH. 9 REV. C

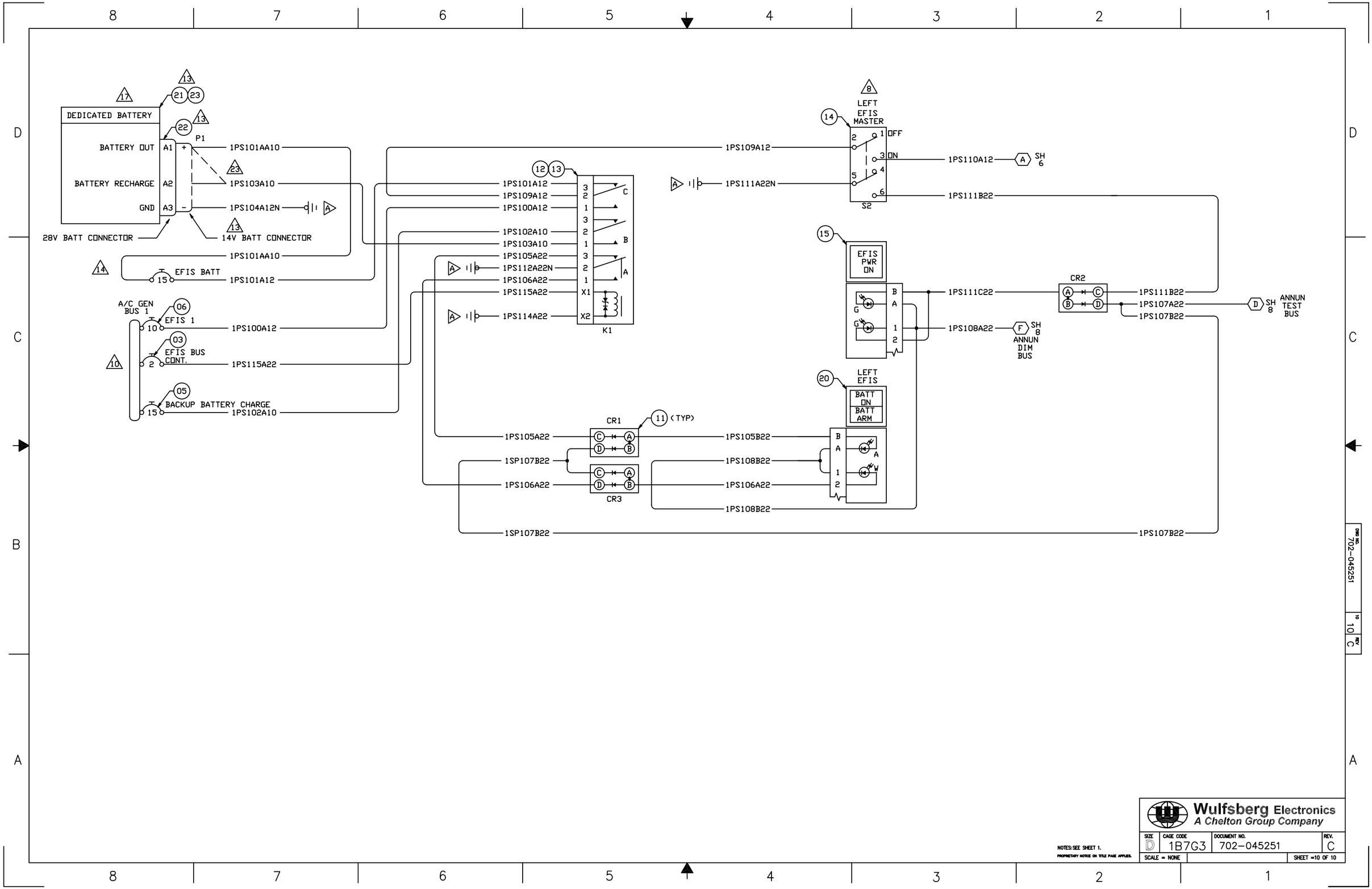

NOTES:SEE SHEET 1.

PROPRIETARY NOTICE ON TITLE PAGE APPLIES.

Wulfsberg Electronics
A Chelton Group Company

SIZE	CAGE CODE	DOCUMENT NO.	REV.
D	1B7G3	702-045251	C
SCALE = NONE			SHEET =10 OF 10

DWG NO. 702-045251 | 10 | REV. C