NOTES:

(1) UNLESS NOTED OTHERWISE ALL NEW WIRE TO MEET MIL-W-22759/16 OR LATER REVISION. ALL SHIELDED WIRE TO BE MIL-C-27500E WITH SHIELDS TYPE (T) AND JACKETS TYPE (14). INSTALL WIRING FOLLOWING CHELTON INSTRUCTIONS PER DOCUMENT 150-045264 . FOR ADDITIONAL ROUTING, BONDING AND GROUNDING DETAILS REF: AC43-13-1B CHAPTER 11, SECTIONS 9,10,11,& 15.

(2) GROUND NOTES

A DC GND C SIGNAL GND
B AC GND D AIRFRAME & SHIELD GND
XX CHASSIS GND

GROUNDS TO BE AS SHORT AS POSSIBLE UNLESS OTHERWISE INDICATED. GROUNDS UNDER 6 INCHES IN LENGTH DO NOT REQUIRE A WIRE NUMBER. SHIELD PREPARATION SHOULD NOT EXCEED 3 INCHES FROM CONNECTOR. SHIELD GROUNDS MAY BE ACCOMPLISHED BY DAISY CHAINING. SPLICING OR INDIVIDUALLY GROUNDING SHIELD TO APPROPRIATE GND DEVICE.

(3) XXXX DENOTES REFERENCE TO DWG APPLICABLE DWG.

(4) ⬡ REFERS TO LIKE LETTER IN SYMBOL THIS DWG.

(5) ALL WIRES 22AWG UNLESS OTHERWISE SPECIFIED.

(6) ---------- DENOTES EXISTING AIRCRAFT WIRING OR COMPONENT.

(7) -·-·-·-·-·- DENOTES OPTIONAL EQUIPMENT.

8 SWITCHES TO BE LOCATED NEAR EFIS INDICATOR.

9 WARN AUDIO IS TO BE CONNECTED TO AN UNMUTED AUDIO FUNCTION OF COCKPIT AUDIO.

10 SIGNAL TYPE TO BE DETERMINED AT TIME OF INSTALLATION. CONNECT WIRING AS NEEDED. DO NOT CONNECT WIRING TO BOTH SIGNAL TYPES.

11 LOCATE KEYBOARD CONNECTOR IN A CONVENIENT LOCATION FOR EFIS CHECKOUT AND UPDATING.

12 A/C PANEL LIGHTING REFERENCE VOLTAGE (28,14 OR 5 VOLTS) WILL BE INSTALLED ON 1P3, PIN 4. THE DIM VOLTAGE WILL BE INSTALLED ON 1P3, PIN 11.

13 OPTIONAL UNIT NOT INSTALLED IN ALL CONFIGURATIONS.

(14) RESERVED

15 REFER TO CHELTON FLIGHT SYSTEMS FIELD SERVICE NOTICE: EFIS-II INSTALLATION FOR ANNUNCIATED SWITCH OPTION

16 OMIT IF SYSTEM IS BEING INSTALLED IN A FIXED GEAR AIRCRAFT.

(17) CONFIGURATIONS NOT LISTED ON DRAWING CONFIGURATION TABLE SHALL BE ASSESSED BY FAA FOR REGULATORY COMPLIANCE TO XX.1309, XX.1311, XX.1353.

18 INSTALL S9501 IN THE PILOTS CONTROL WHEEL AND IDENTIFY AS AUDIO MUTE.

19 LOCATION PER INSTALLATION DRAWINGS 150-045010, 150-045051, 150-045011.

20 CONNECT TO EXISTING AIRCRAFT SYSTEM AS SHOWN IN VENDOR'S MANUAL.

21 FOR SINGLE ENGINE AIRCRAFT, USE LEFT FUEL FLOW ONLY.

(22) FOR SYSTEM CONFIGURATION REFER TO CHILTON FLIGHT FLIGHT SYSTEM DOCUMENT NO. 150-045264.

(23) SMALL PARTS AND ELECTRICAL COMPONENTS REQUIRED FOR INSTALLATION THAT ARE NOT SPECIFICALLY CALLED OUT IN PARTS LIST, SHALL MEET THE REQUIREMENTS FOR AEROSPACE USE AS 'ACCEPTABLE PARTS' OR 'STANDARD PARTS'. SELECTION OF THESE PARTS SHALL BE IN ACCORDANCE WITH GUIDANCE PROVIDED IN FAA ADVISORY CIRCULAR 20-62D DATED 5/24/96 (OR LATER REVISION)

24 GPS INSTALLATION KIT CONSIST OF THE FOLLOWING:

M24308/2-3F	CONNECTOR
M39029/63-368	SOCKETS
745584-3	SLIDE LATCH
207345-1	BACKSHELL
225554-6	TNC RT ANGLE CONNECTOR
225550-6	TNC STRAIGHT CONNECTOR

25 SHEILD TERMINATION AS PER CHELTON FLIGHT SYSTEM DOCUMENT NO. 100-045242 EFIS II CABLING AND TERMINATION PROCESS. DNC NO. W2438

26 LOW ALT SWITCH IS INSTALLED IN HELICOPTERS ONLY.

(27) RESERVED

28 USE LEFT FUEL FLOW POWER FOR DUAL ADC INSTALLATION

(29) USE OF MIL-C27500 TWISTED SHIELDED WIRE FOR DESCRETED LINES IS PERMISSIBLE. GND SHIELD AT CONNECTOR END.

30 CABLES ARE PART OF THE IDU RACK ASSEMBLY.

31 XX = LENGTH IN INCHES.

32 BKLT REFERENCE VOLTAGE MUST BE SWITCHED OFF FOR DAY OPERATIONS. CONNECT BKLT CONTROL TO EXISTING DIMMER CONTROL OUTPUT.

(33) SEE INSTALLATION GUIDE 150-045264 FOR SOFTWARE CONFIGURATION CARD INSTALLATION.

(34) WIRING CODE

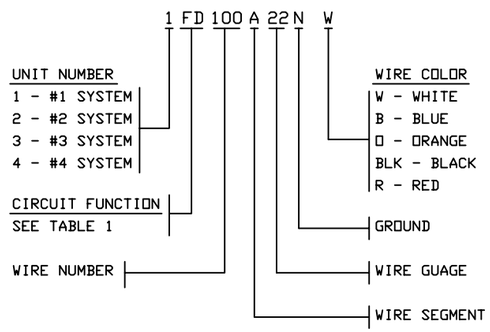

TABLE 1

CA - AUTOPILOT	LI - BACK LIGHTING
EF - FUEL FLOW SYS	MR - SWITCHING SYS
FA - AIR DATA SYS	RD - ADF SYS
FD - EFIS SYS	RM - MARKER SYS
FF - FLIGHT DIRECTOR SYS	RG - ADS-B
FG - AHRS SYS	RN - VHF NAV SYS
FN - GPS SYS	SA - RADIO ALTIMETER
PS - POWER BUS	SS - STORM SCOPE SYS
	ST - TCAD SYS

REVISIONS

REV	DESCRIPTION	DATE	APPROVED	APPROVED
D	INITIAL WULFSBERG RELEASE PER DCN W1894	12/19/02	R. DURALL	V. Wallace
E	UPDATE PART NUMBERS PER DCN W2610	12/23/02	R. DURALL	V. Wallace
F	UPDATE PART NUMBERS UPDATE WIRING LABELS REMOVE SH 15 PER W2657	01/30/03	R. DURALL	V. Wallace
G	UPDATE PART NUMBERS PER DCN W2696	02/19/03	R. DURALL	V. Wallace
H	MODIFIED ADC WIRING FOR DUAL ADC INSTALLATION PER DCN W2752	03/28/03	R. DURALL	V. Wallace
J	UPDATE WIRE NUMBERS AND ADD SWITCH OPTIONS PER DCN W2800	05/20/03	R. DURALL	V. Wallace

DRAWING CONFIGURATION TABLE

	SENSORS			DISPLAYS				PAGES OF THIS DWG USED													
CONFIG	ADC	GPS	AHRS	IDU1	IDU2	IDU3	IDU4	1	2	3	4	5	6	7	8	9	10	11	12	13	14	15
101	1	1	1	1	0	0	0	X	X	X	X	X	X									X
102	1	1	1	1	1	0	0	X	X	X	X	X	X	X								X
103	2	2	2	1	1	0	0	X	X	X	X	X		X			X	X	X	X	X	X
104	1	1	1	1	1	1	0	X	X	X	X	X	X	X	X							X
105	2	2	2	1	1	1	0	X	X	X	X	X		X	X		X	X	X	X	X	X
106	1	1	1	1	1	1	1	X	X	X	X	X	X	X	X	X						X
107	2	2	2	1	1	1	1	X	X	X	X	X		X	X	X	X	X	X	X	X	X

X = PAGES USED FOR THIS CONFIGURATION

THIRD ANGLE PROJECTION

NEXT ASSEMBLY | FINAL ASSEMBLY

APPLICATION

TOLERANCES: (ALL DIMENSIONS ARE IN INCHES, UNLESS OTHERWISE SPECIFIED.)
FRACTIONS ±X DECIMALS .XX± .XXX± ANGLES ±X°

MATERIAL

FINISH

DO NOT SCALE DRAWING

TYPED SIGNATURES INDICATE APPROVAL. HANDWRITTEN SIGNATURE APPROVAL OF THIS DOCUMENT IS ON FILE AT WULFSBERG ELECTRONICS, PRESCOTT, ARIZONA.

APPROVALS		DATE
DRAWN	Randy Harper	07/25/02
ENGINEER	Kevin Campros	07/25/02
CHECKED	Buddy Jackson	07/25/02
ISSUED	Vern Wallace	12/19/02

Wulfsberg Electronics
A Chelton Group Company

W/D EFIS IDU INTERFACE

SIZE	CAGE CODE	DOCUMENT NO.	REV.
B	1B7G3	702-045250	J

SCALE = NONE SHEET = 1 OF 15

DWG NO. 702-045250 SH 1 REV J

THIS DOCUMENT CONTAINS PROPRIETARY INFORMATION OF WULFSBERG ELECTRONICS NEITHER RECEIPT NOR POSSESSION THEREOF CONFERS ANY RIGHT TO REPRODUCE OR USE, OR DISCLOSE, IN WHOLE OR IN PART, ANY SUCH INFORMATION WITHOUT WRITTEN AUTHORIZATION FROM WULFSBERG ELECTRONICS.

							ITEM	PART NO.	NOMENCLATURE	SPEC/VENDOR
							42			
							41			
							40			
							39			
							38			
							37			
							36			
							35			
							34			
							33			
							32			
							31			
							30			
1	1	-	-	-	-	-	29	310-045630-01	SCC NO4 (MFD3)	CHELTON AVIONICS
1	1	1	1	-	-	-	28	310-045629-01	SCC NO3 (MFD2)	CHELTON AVIONICS
1	1	1	1	1	1	-	27	310-045628-01	SCC NO2 (MFD1)	CHELTON AVIONICS
1	1	1	1	1	1	-	26	310-045626-01	SCC NO1 (PFD)	CHELTON AVIONICS
-	-	-	-	-	-	1	25	310-045625-01	SCC NOO (SINGLE IDU)	CHELTON AVIONICS
							24			
1	-	1	-	1	-	-	23	149-045264-03	INSTALL KIT, DUAL SENSOR	CHELTON AVIONICS
							22			
							21			
							20			
2	1	2	1	2	1	1	19	8350-0062-01	AHRS 500GA-202	CROSS BOW
							18			
AR	AR	AR	AR	AR	AR	AR	17	RG142/U (OR EQUIVALENT)	COAX CABLE	QPL
2	1	2	1	2	1	1	16	CI405-100	GPS ANTENNA	COMANT
2	1	2	1	2	1	1	15	1031-4200-01	GPS SENSOR INSTALLATION KIT	FREEFLIGHT
2	1	2	1	2	1	1	14	84100-01-0101	GPS SENSOR	FREEFLIGHT
							13			
AR	AR	AR	AR	AR	AR	AR	12	201B-6 OR 231	FUEL FLOW TRANSDUCER	FLOW SCAN
2	1	2	1	2	1	1	11	681201A-1	TEMP PROBE KIT	SHADIN
2	1	2	1	2	1	1	10	962830A-1-S-8	ADC COMPUTER	SHADIN
							09			
AR	AR	AR	AR	AR	AR	AR	08	401-045515-05	TRAY, IDU 5-CONNECTOR	CHELTON AVIONICS
AR	AR	AR	AR	AR	AR	AR	07	401-045515-03	TRAY, IDU 3-CONNECTOR	CHELTON AVIONICS
2	2	AR	AR	1	1	AR	06	146-045520-01	NON-SLIP KIT ASSY	CHELTON AVIONICS
2	2	AR	AR	1	1	AR	05	310-045600-01	SLIP KIT ASSY	CHELTON AVIONICS
3	3	2	2	1	1	-	04	149-045264-02	INSTALL KIT, MFD	CHELTON AVIONICS
1	1	1	1	1	1	1	03	149-045264-01	INSTALL KIT, PFD	CHELTON AVIONICS
4	4	3	3	2	2	1	02	401-045500-0101	IDU	CHELTON AVIONICS
-107	-106	-105	-104	-103	-102	-101	01	-	EFIS IDU INTERFACE	-

24

NOTES: SEE SHEET 1.

PROPRIETARY NOTICE ON TITLE PAGE APPLIES.

Wulfsberg Electronics
A Chelton Group Company

SIZE	CAGE CODE	DOCUMENT NO.	REV.
D	1B7G3	702-045250	J
SCALE = NONE			SHEET = 2 OF 15

DWG NO. 702-045250 SH 2 REV J

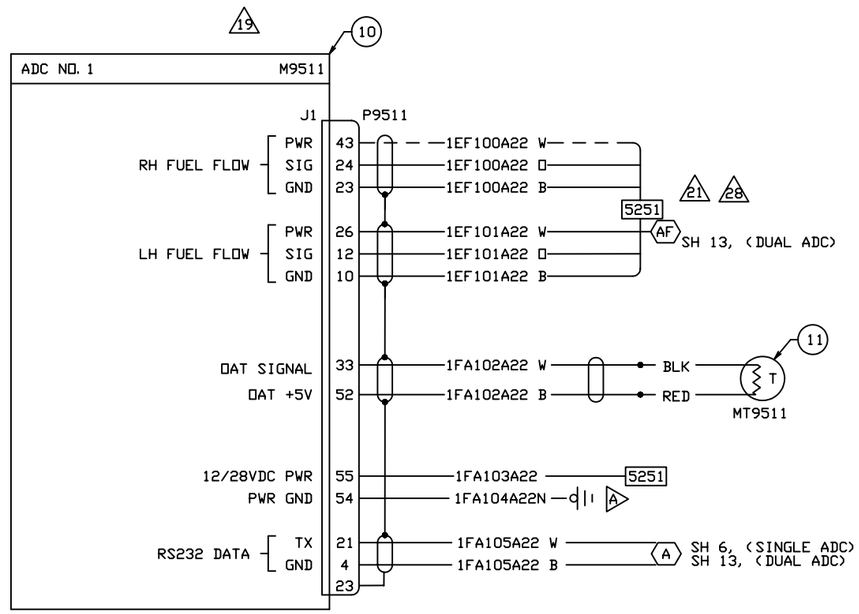

NOTES: SEE SHEET 1.

PROPRIETARY NOTICE ON TITLE PAGE APPLIES.

Wulfsberg Electronics
A Chelton Group Company

SIZE	CAGE CODE	DOCUMENT NO.	REV.
D	1B7G3	702-045250	J

SCALE = NONE | SHEET = 3 OF 15

DWG NO. 702-045250 SH 3 REV J

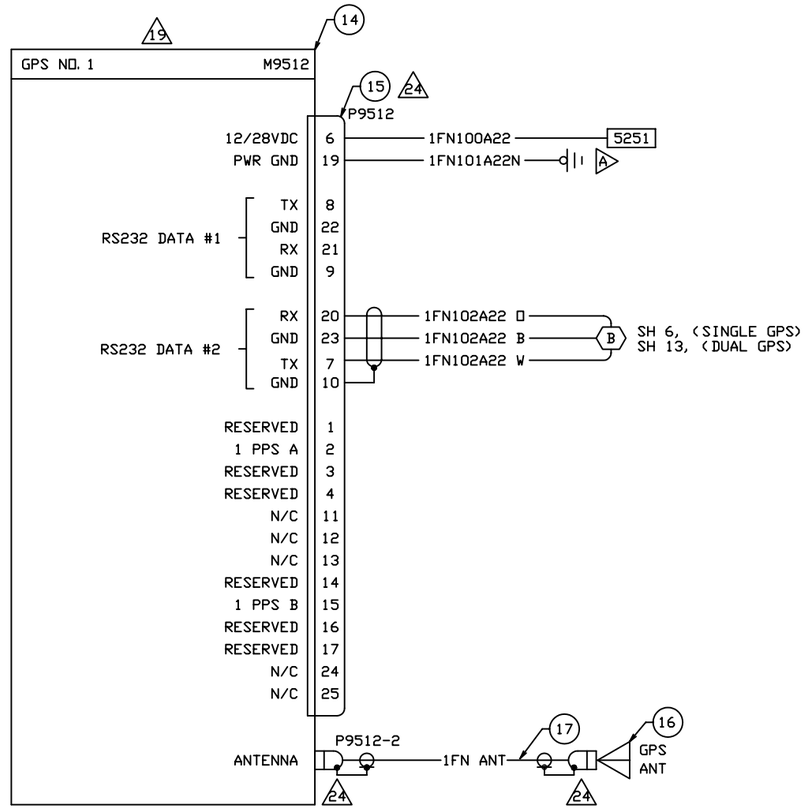

NOTES: SEE SHEET 1.

PROPRIETARY NOTICE ON TITLE PAGE APPLIES.

Wulfsberg Electronics
A Chelton Group Company

SIZE	CAGE CODE	DOCUMENT NO.	REV.
D	1B7G3	702-045250	J
SCALE = NONE			SHEET = 4 OF 15

DWG NO. 702-045250 SH 4 REV J

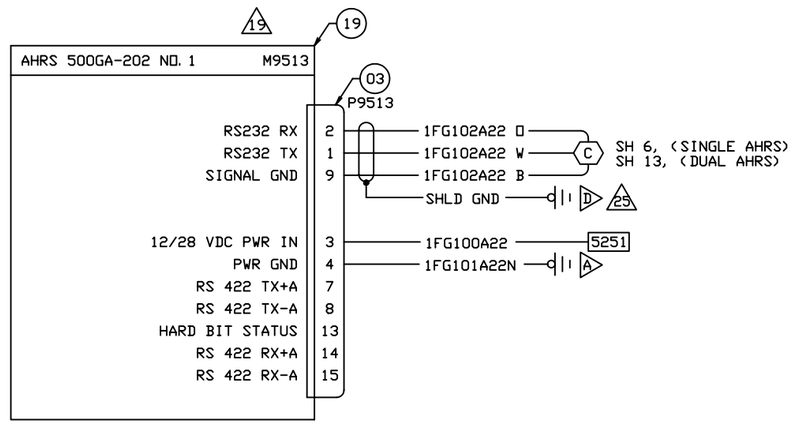

NOTES: SEE SHEET 1.

PROPRIETARY NOTICE ON TITLE PAGE APPLIES.

Wulfsberg Electronics
A Chelton Group Company

SIZE	CAGE CODE	DOCUMENT NO.	REV.
D	1B7G3	702-045250	J
SCALE = NONE			SHEET = 5 OF 15

DWG NO. 702-045250 SH 5 REV J

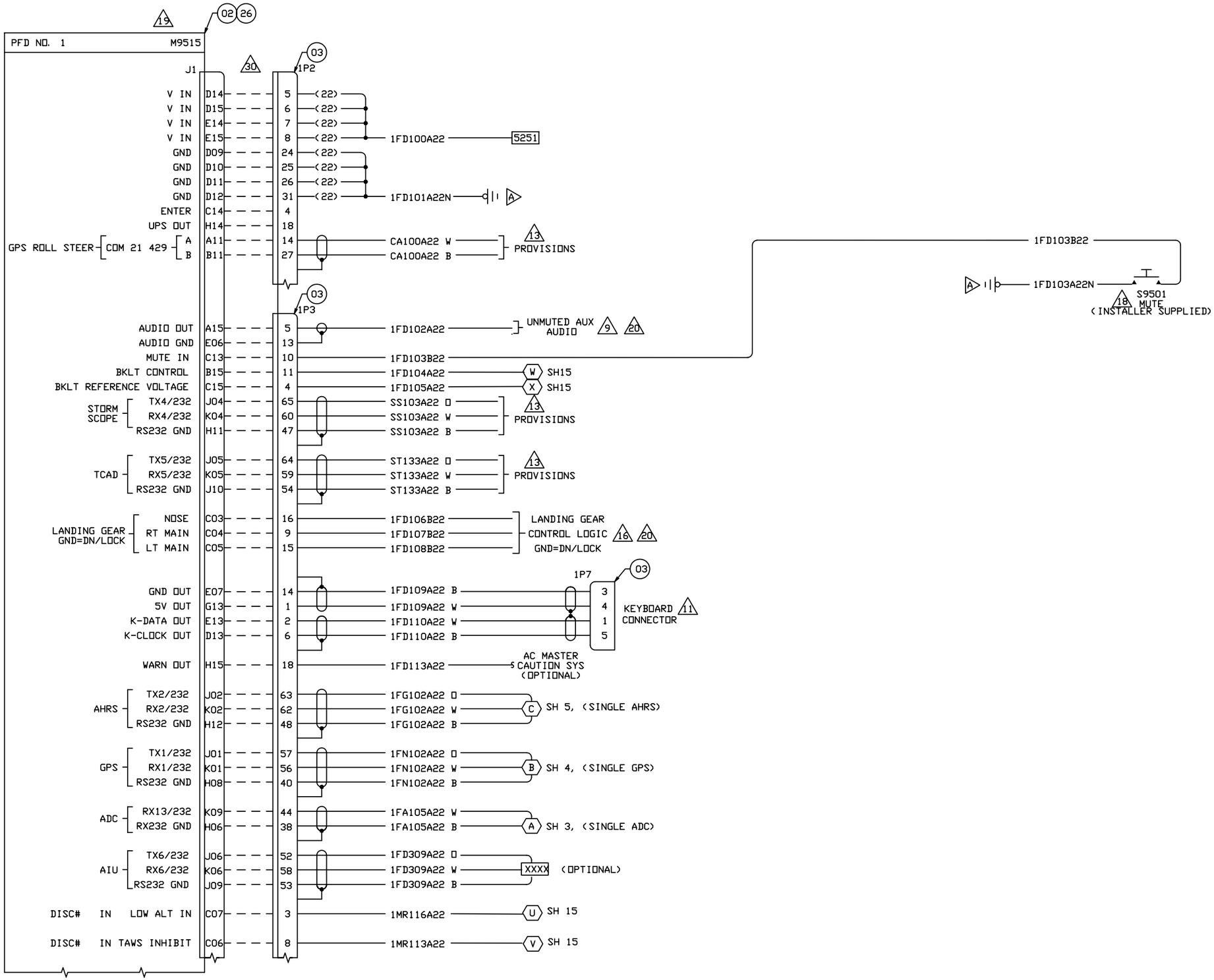

NOTES: SEE SHEET 1.

PROPRIETARY NOTICE ON TITLE PAGE APPLIES.

Wulfsberg Electronics
A Chelton Group Company

SIZE	CAGE CODE	DOCUMENT NO.	REV.
D	1B7G3	702-045250	J
SCALE = NONE			SHEET = 6 OF 15

DWG NO. 702-045250 SH 6 REV J

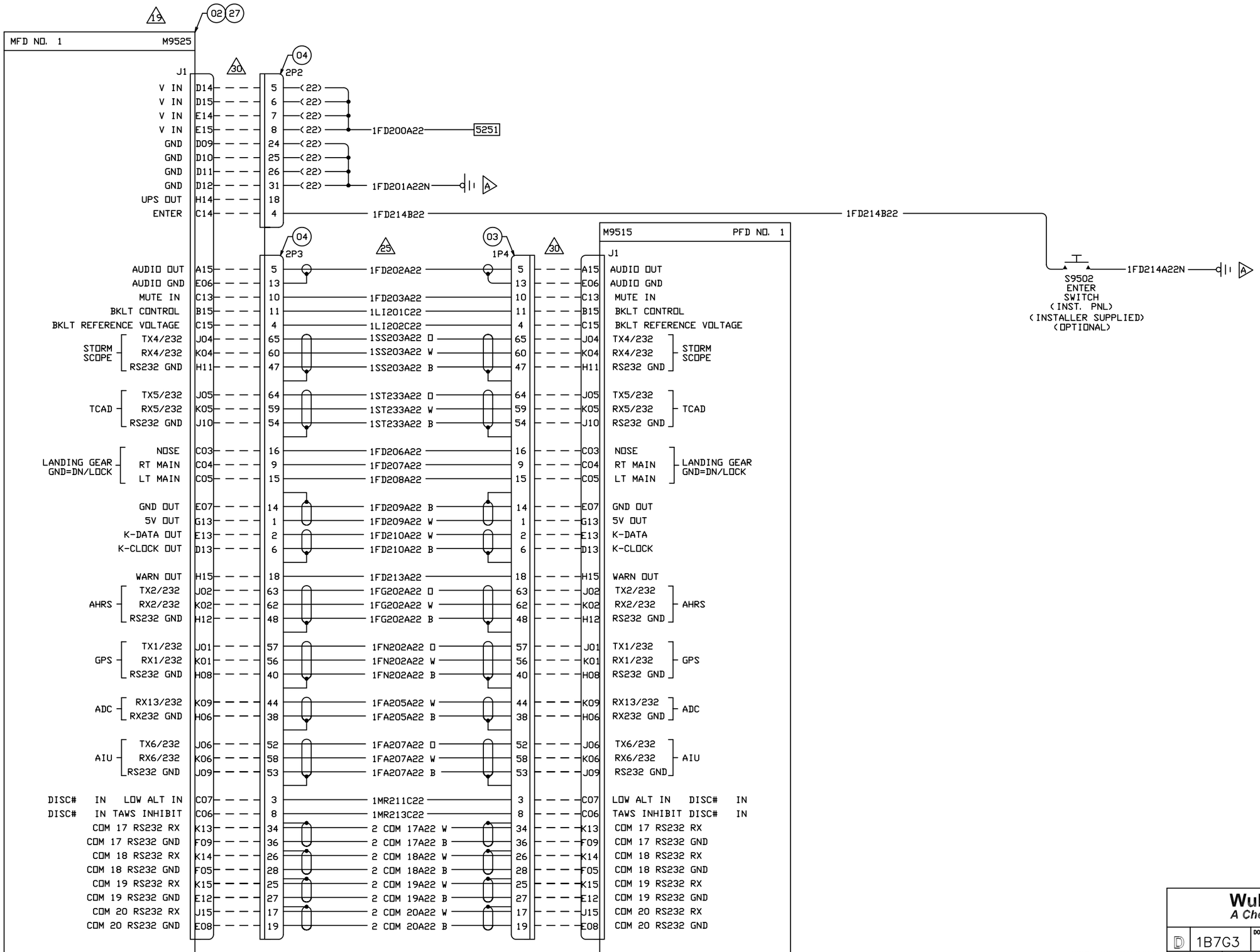

PROPRIETARY NOTICE ON TITLE PAGE APPLIES.

Wulfsberg Electronics
A Chelton Group Company

D	1B7G3	DOCUMENT NO. 702-045250	REV. J
SCALE = NONE			SHEET = 7 OF 15

DWG NO. 702-045250 SH 7 REV J

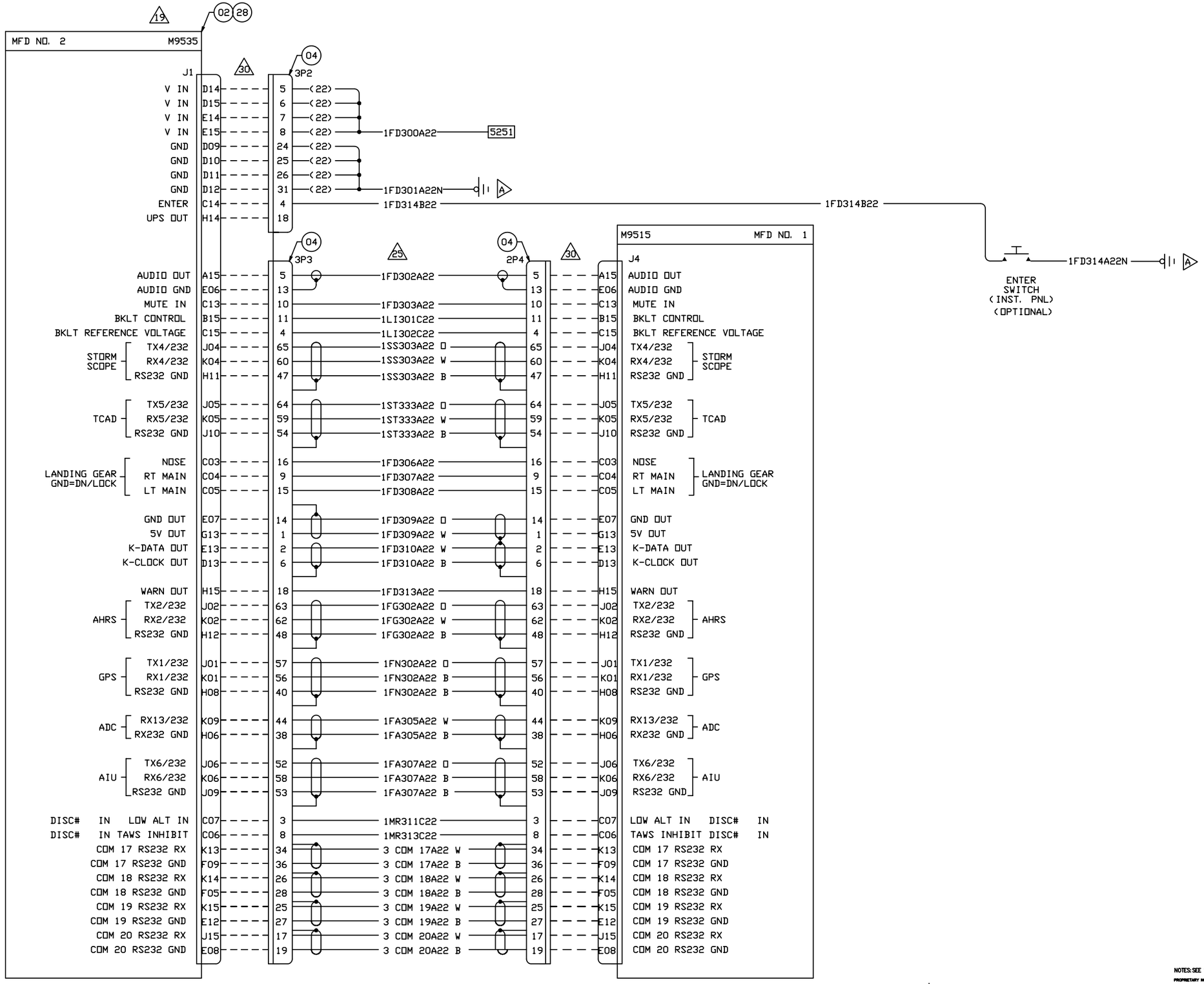

NOTES: SEE SHEET 1.

PROPRIETARY NOTICE ON TITLE PAGE APPLIES.

Wulfsberg Electronics
A Chelton Group Company

SIZE	CAGE CODE	DOCUMENT NO.	REV.
D	1B7G3	702-045250	J

SCALE = NONE | SHEET = 8 OF 15

DWG NO. 702-045250 SH 8 REV J

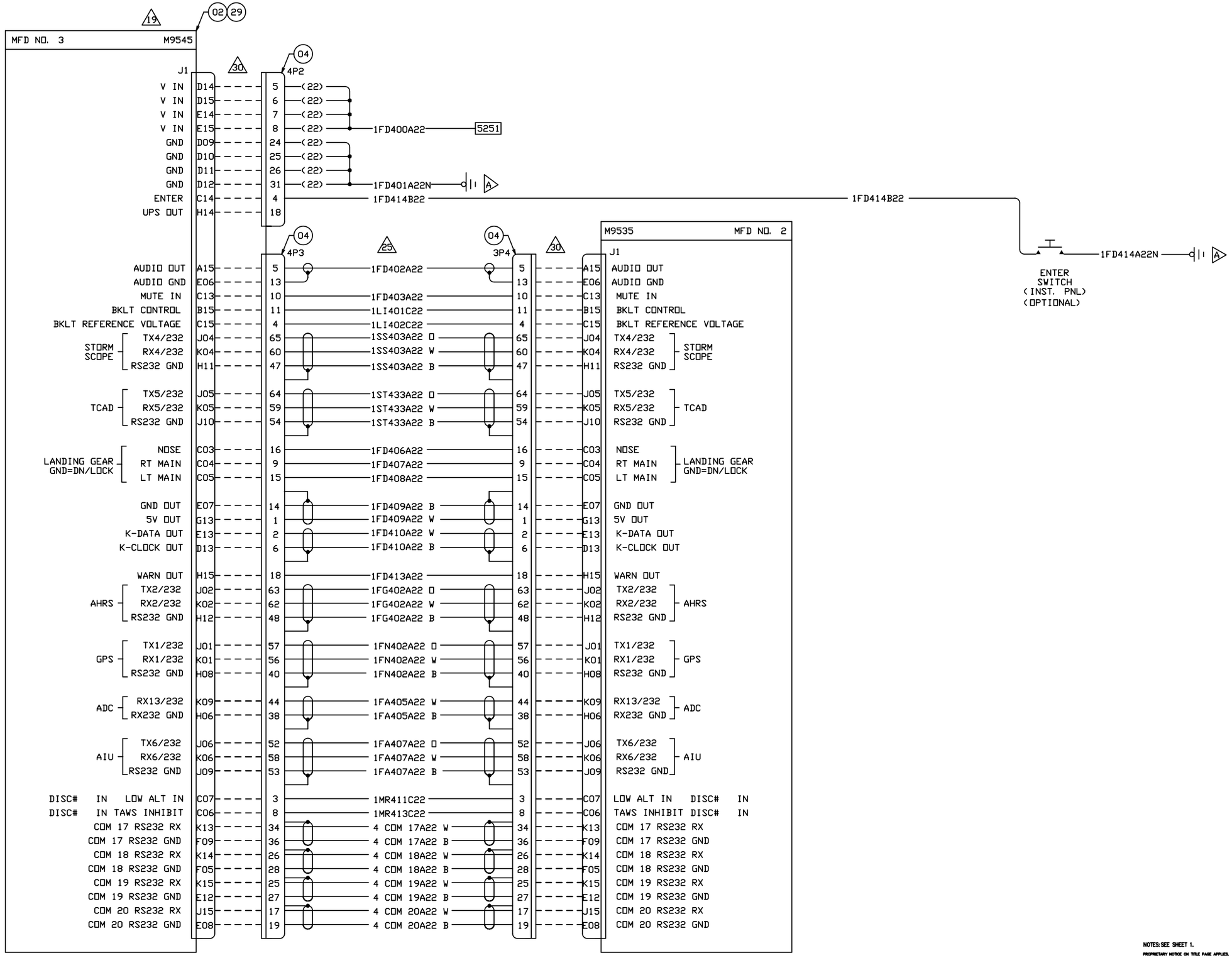

NOTES: SEE SHEET 1.

PROPRIETARY NOTICE ON TITLE PAGE APPLIES.

Wulfsberg Electronics
A Chelton Group Company

SIZE	CAGE CODE	DOCUMENT NO.	REV.
D	1B7G3	702-045250	J

SCALE = NONE

SHEET = 9 OF 15

DWG NO. 702-045250 SH 9 REV J

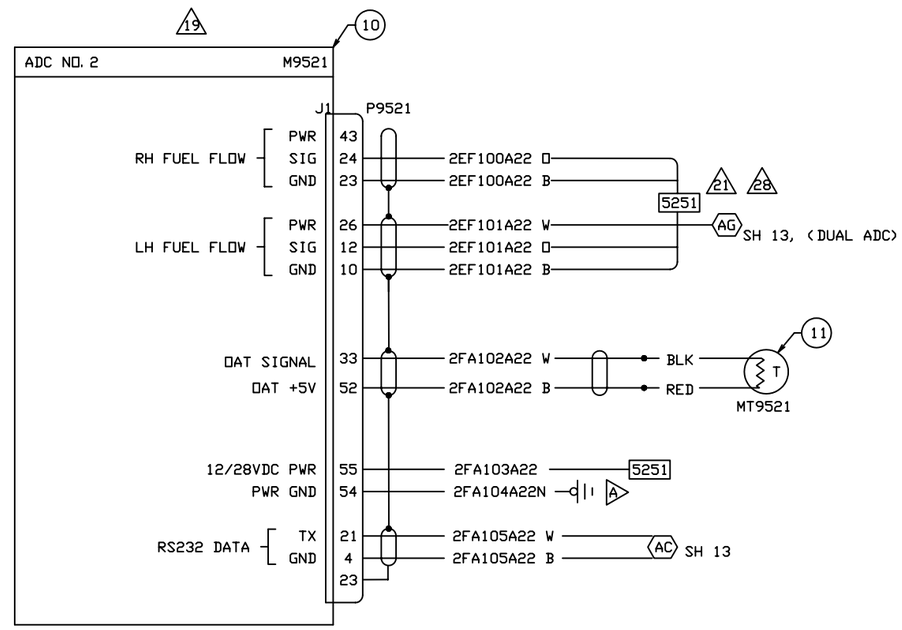

NOTES: SEE SHEET 1.

PROPRIETARY NOTICE ON TITLE PAGE APPLIES.

Wulfsberg Electronics
A Chelton Group Company

SIZE	CAGE CODE	DOCUMENT NO.	REV.
D	1B7G3	702-045250	J
SCALE = NONE			SHEET = 10 OF 15

DWG NO. 702-045250 SH 10 REV J

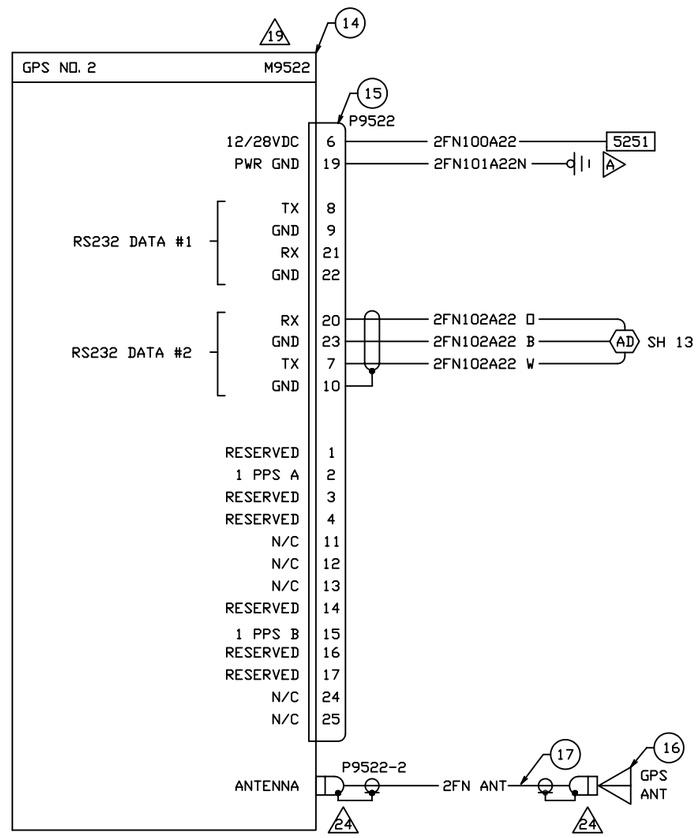

NOTES: SEE SHEET 1.

PROPRIETARY NOTICE ON TITLE PAGE APPLIES.

Wulfsberg Electronics
A Chelton Group Company

SIZE	CAGE CODE	DOCUMENT NO.	REV.
D	1B7G3	702-045250	J
SCALE = NONE			SHEET = 11 OF 15

DWG NO. 702-045250 SH 11 REV J

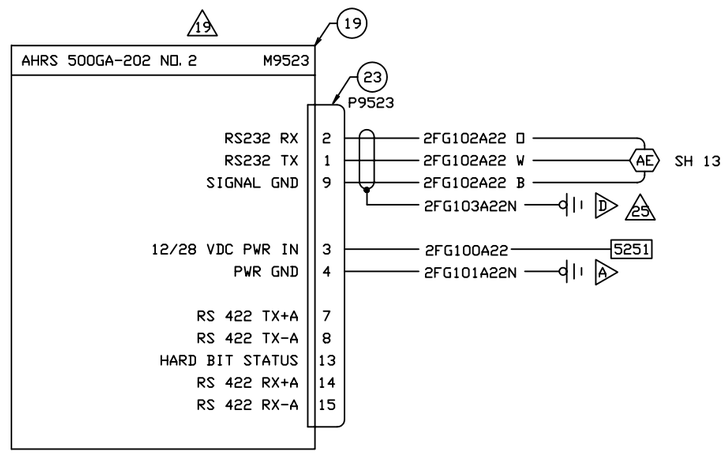

NOTES: SEE SHEET 1.

PROPRIETARY NOTICE ON TITLE PAGE APPLIES.

Wulfsberg Electronics
A Chelton Group Company

SIZE	CAGE CODE	DOCUMENT NO.	REV.
D	1B7G3	702-045250	J
SCALE = NONE			SHEET = 12 OF 15

DWG NO. 702-045250 SH 12 REV J

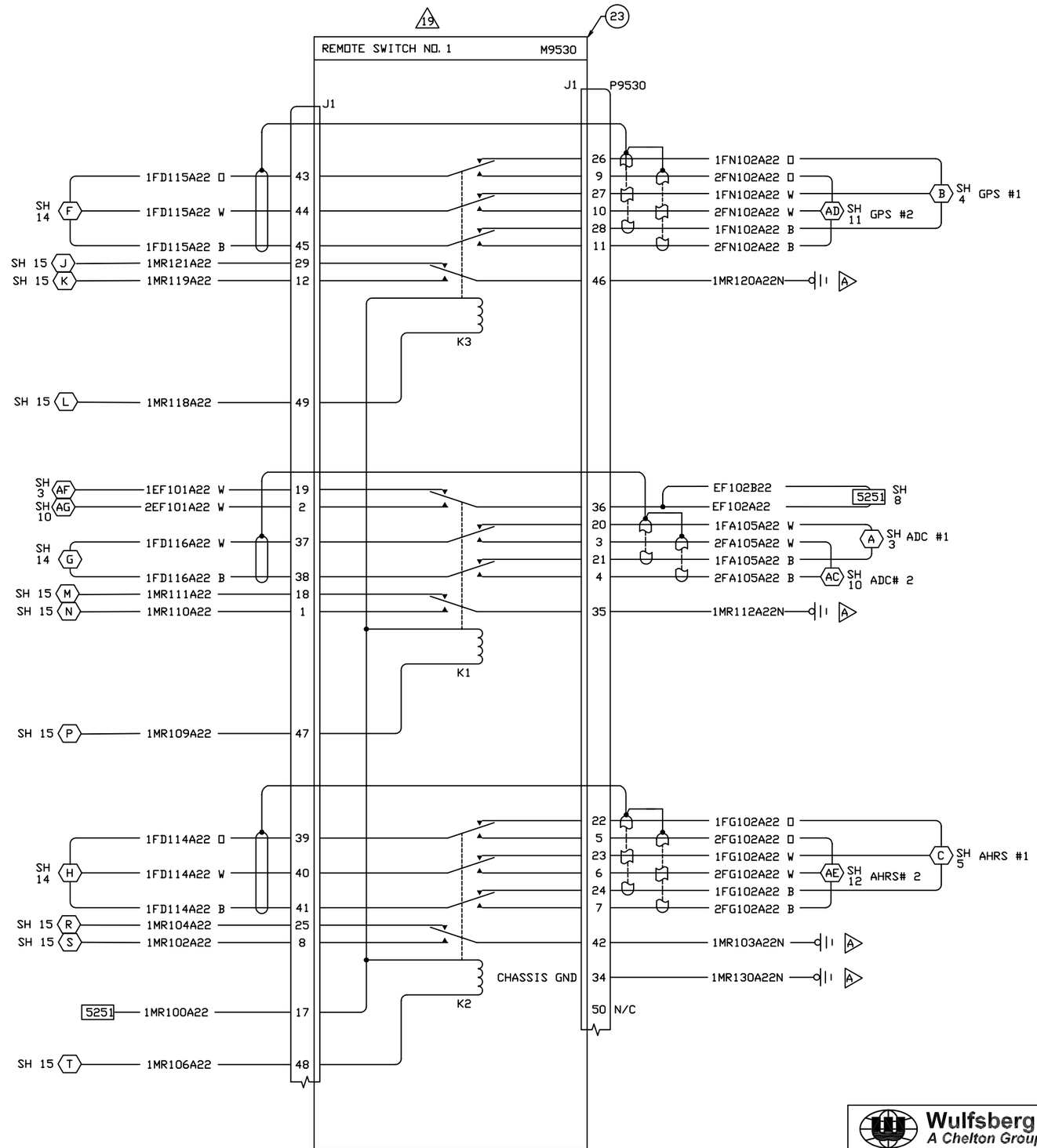

NOTES: SEE SHEET 1.

PROPRIETARY NOTICE ON TITLE PAGE APPLIES.

Wulfsberg Electronics
A Chelton Group Company

SIZE	CAGE CODE	DOCUMENT NO.	REV.
D	1B7G3	702-045250	J
SCALE = NONE			SHEET = 13 OF 15

DWG NO. 702-045250 SH 13 REV J

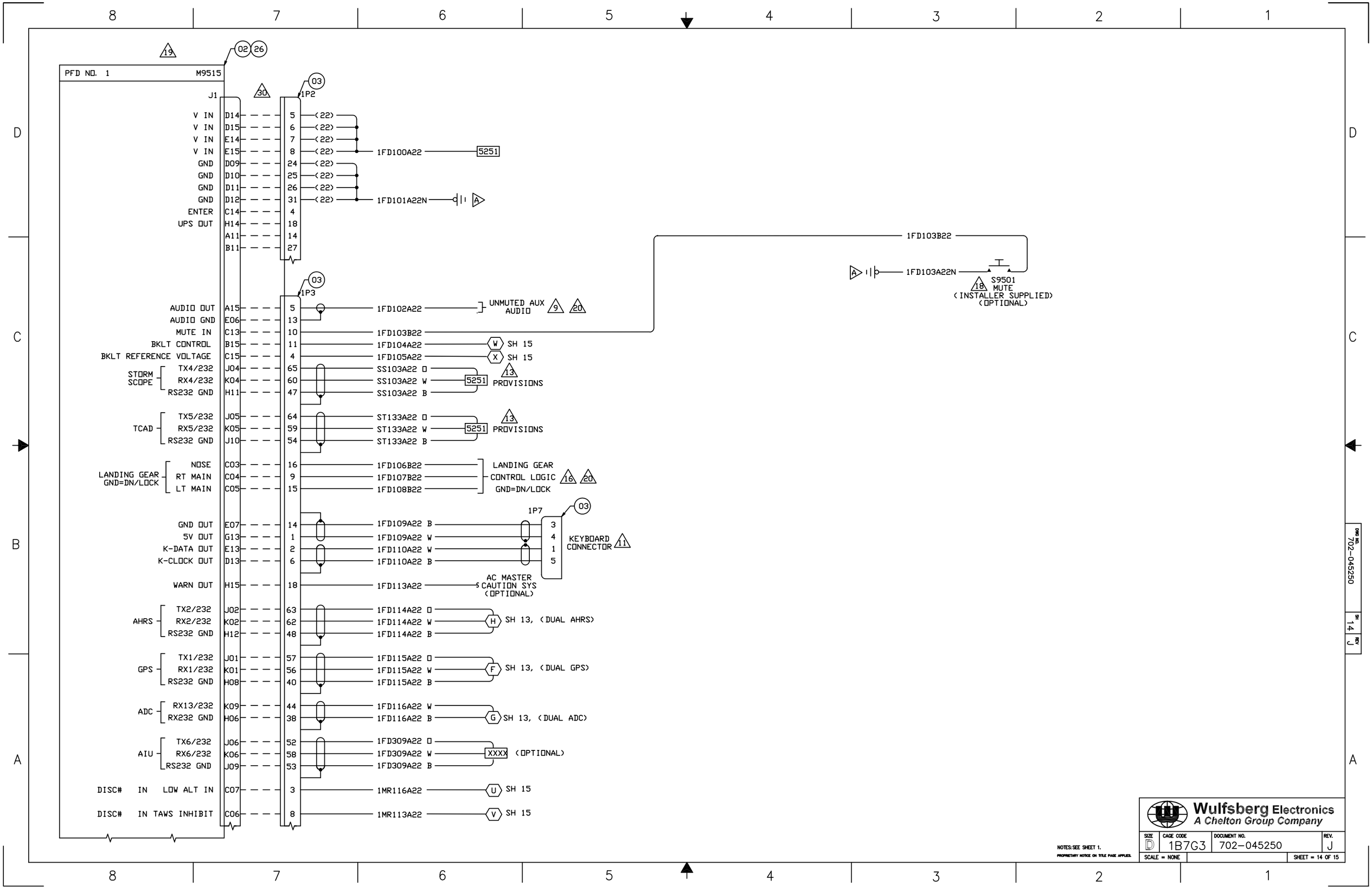
PFD NO. 1 M9515
J1
1P2
1P3
1P7
V IN D14 5 (22)
V IN D15 6 (22)
V IN E14 7 (22)
V IN E15 8 (22) 1FD100A22 5251
GND D09 24 (22)
GND D10 25 (22)
GND D11 26 (22)
GND D12 31 (22) 1FD101A22N
ENTER C14 4
UPS OUT H14 18
A11 14
B11 27
1FD103B22
1FD103A22N
S9501 MUTE (INSTALLER SUPPLIED) (OPTIONAL)
AUDIO OUT A15 5 1FD102A22 UNMUTED AUX AUDIO
AUDIO GND E06 13
MUTE IN C13 10 1FD103B22
BKLT CONTROL B15 11 1FD104A22 SH 15
BKLT REFERENCE VOLTAGE C15 4 1FD105A22 SH 15
STORM SCOPE TX4/232 J04 65 SS103A22 O
RX4/232 K04 60 SS103A22 W 5251 PROVISIONS
RS232 GND H11 47 SS103A22 B
TCAD TX5/232 J05 64 ST133A22 O
RX5/232 K05 59 ST133A22 W 5251 PROVISIONS
RS232 GND J10 54 ST133A22 B
LANDING GEAR GND=DN/LOCK NOSE C03 16 1FD106B22
RT MAIN C04 9 1FD107B22
LT MAIN C05 15 1FD108B22
LANDING GEAR CONTROL LOGIC GND=DN/LOCK
GND OUT E07 14 1FD109A22 B
5V OUT G13 1 1FD109A22 W
K-DATA OUT E13 2 1FD110A22 W
K-CLOCK OUT D13 6 1FD110A22 B
KEYBOARD CONNECTOR
WARN OUT H15 18 1FD113A22 AC MASTER CAUTION SYS (OPTIONAL)
AHRS TX2/232 J02 63 1FD114A22 O
RX2/232 K02 62 1FD114A22 W
RS232 GND H12 48 1FD114A22 B
SH 13, (DUAL AHRS)
GPS TX1/232 J01 57 1FD115A22 O
RX1/232 K01 56 1FD115A22 W
RS232 GND H08 40 1FD115A22 B
SH 13, (DUAL GPS)
ADC RX13/232 K09 44 1FD116A22 W
RX232 GND H06 38 1FD116A22 B
SH 13, (DUAL ADC)
AIU TX6/232 J06 52 1FD309A22 O
RX6/232 K06 58 1FD309A22 W XXXX (OPTIONAL)
RS232 GND J09 53 1FD309A22 B
DISC# IN LOW ALT IN C07 3 1MR116A22 SH 15
DISC# IN TAWS INHIBIT C06 8 1MR113A22 SH 15
NOTES: SEE SHEET 1.
PROPRIETARY NOTICE ON TITLE PAGE APPLIES.
Wulfsberg Electronics
A Chelton Group Company
SIZE D
CAGE CODE 1B7G3
DOCUMENT NO. 702-045250
REV. J
SCALE = NONE
SHEET = 14 OF 15
DWG NO. 702-045250
SH 14
REV J

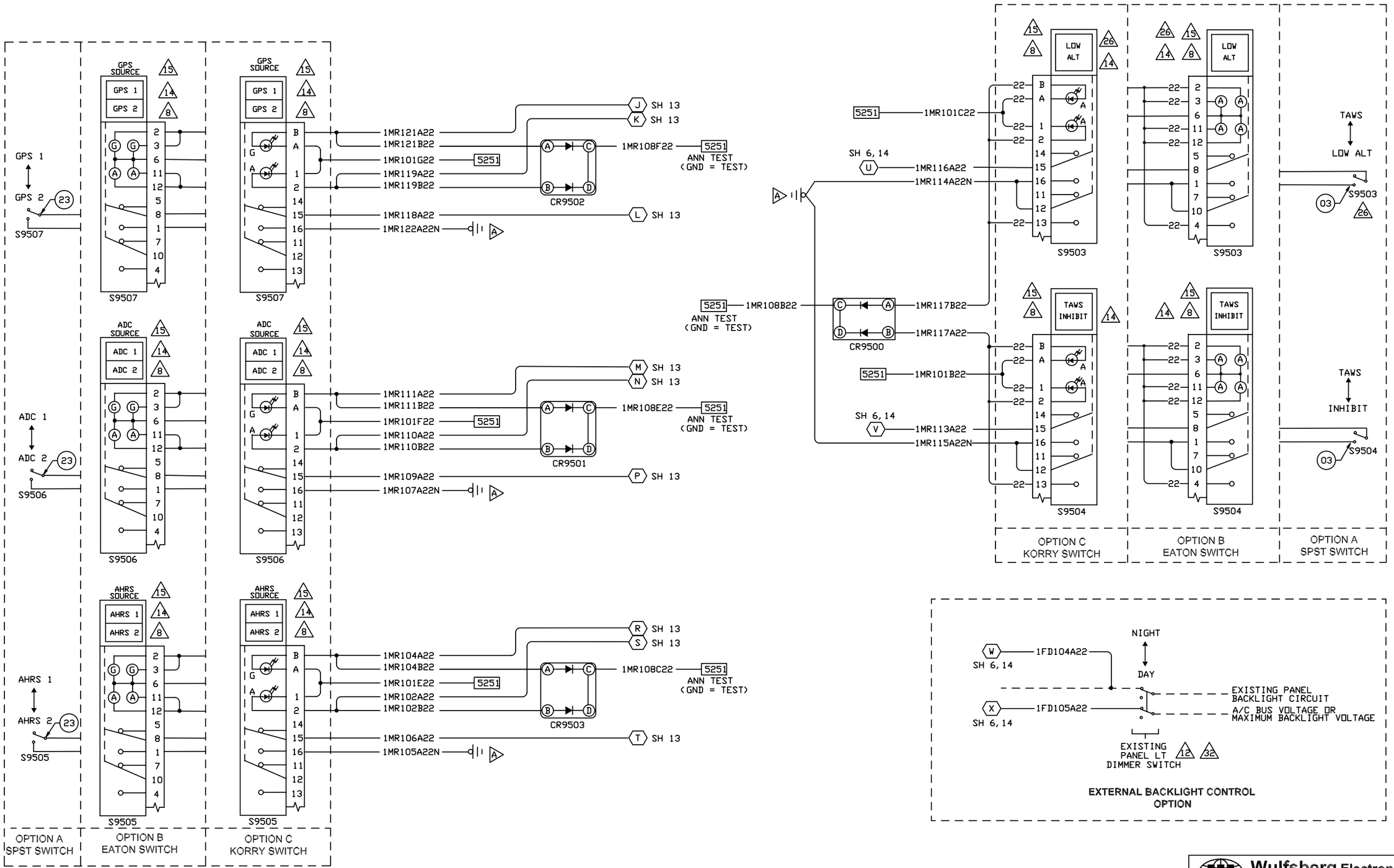

NOTES: SEE SHEET 1.

PROPRIETARY NOTICE ON TITLE PAGE APPLIES.

Wulfsberg Electronics
A Chelton Group Company

SIZE	CAGE CODE	DOCUMENT NO.	REV.
D	1B7G3	702-045250	J
SCALE = NONE			SHEET = 15 OF 15

DWG NO. 702-045250 SH 15 REV J