NOTES:

(1) UNLESS NOTED OTHERWISE ALL NEW WIRE TO MEET MIL-W-22759/16 OR LATER REVISION. ALL SHIELDED WIRE TO BE MIL-C-27500E WITH SHIELDS TYPE (T) AND JACKETS TYPE (14). INSTALL WIRING FOLLOWING CHELTON INSTRUCTIONS PER DOCUMENT 150-045264 . FOR ADDITIONAL ROUTING, BONDING AND GROUNDING DETAILS REF: AC43-13-1B CHAPTER 11, SECTIONS 9, 10, 11, & 15.

(2) GROUND NOTES

A DC GND — C SIGNAL GND

B AC GND — D AIRFRAME & SHIELD GND

XX — CHASSIS GND

GROUNDS TO BE AS SHORT AS POSSIBLE UNLESS OTHERWISE INDICATED. GROUNDS UNDER 6 INCHES IN LENGTH DO NOT REQUIRE A WIRE NUMBER. SHIELD PREPARATION SHOULD NOT EXCEED 3 INCHES FROM CONNECTOR. SHIELD GROUNDS MAY BE ACCOMPLISHED BY DAISY CHAINING. SPLICING OR INDIVIDUALLY GROUNDING SHIELD TO APPROPRIATE GND DEVICE.

(3) XXXX DENOTES REFERENCE TO DWG APPLICABLE DWG.

(4) ⬡ REFERS TO LIKE LETTER IN SYMBOL THIS DWG.

(5) ALL WIRES 22AWG UNLESS OTHERWISE SPECIFIED.

(6) ———— DENOTES EXISTING AIRCRAFT WIRING OR COMPONENT.

(7) ———— DENOTES OPTIONAL EQUIPMENT.

(8) ANNUNCIATED SWITCHES TO BE LOCATED NEAR EFIS INDICATOR.

(9) WARN AUDIO IS TO BE CONNECTED TO AN UNMUTED AUDIO FUNCTION OF COCKPIT AUDIO.

(10) SIGNAL TYPE TO BE DETERMINED AT TIME OF INSTALLATION. CONNECT WIRING AS NEEDED. DO NOT CONNECT WIRING TO BOTH SIGNAL TYPES.

(11) LOCATE KEYBOARD CONNECTOR IN A CONVENIENT LOCATION FOR EFIS CHECKOUT AND UPDATING.

(12) A/C PANEL LIGHTING REFERENCE VOLTAGE (28, 14 OR 5 VOLTS) WILL BE INSTALLED ON 1P3, PIN 4. THE DIM VOLTAGE WILL BE INSTALLED ON 1P3, PIN 11.

(13) OPTIONAL UNIT NOT INSTALLED IN ALL CONFIGURATIONS.

(14) IF INSTALLED IN 14 VOLT AIRCRAFT, CHANGE ANNUNCIATOR PART NUMBER FROM 30628-00X TO 30628-10X (X SPECIFIES ANNUNCIATOR LEGEND).

(15) RESERVED.

(16) OMIT IF SYSTEM IS BEING INSTALLED IN A FIXED GEAR AIRCRAFT.

(17) CONFIGURATIONS NOT LISTED ON DRAWING CONFIGURATION TABLE SHALL BE ASSESSED BY FAA FOR REGULATORY COMPLIANCE TO XX.1309, XX.1311, XX.1353.

(18) INSTALL S9501 IN THE PILOTS CONTROL WHEEL AND IDENTIFY AS AUDIO MUTE.

(19) LOCATION PER INSTALLATION DRAWINGS 150-045010, 150-045051, 150-045011.

(20) CONNECT TO EXISTING AIRCRAFT SYSTEM AS SHOWN IN VENDOR'S MANUAL.

(21) FOR SINGLE ENGINE AIRCRAFT, USE LEFT FUEL FLOW ONLY.

(22) FOR SYSTEM CONFIGURATION REFER TO CHILTON FLIGHT FLIGHT SYSTEM DOCUMENT NO. 150-045264.

(23) SMALL PARTS AND ELECTRICAL COMPONENTS REQUIRED FOR INSTALLATION THAT ARE NOT SPECIFICALLY CALLED OUT IN PARTS LIST, SHALL MEET THE REQUIREMENTS FOR AEROSPACE USE AS "ACCEPTABLE PARTS" OR "STANDARD PARTS". SELECTION OF THESE PARTS SHALL BE IN ACCORDANCE WITH GUIDANCE PROVIDED IN FAA ADVISORY CIRCULAR 20-62D DATED 5/24/96 (OR LATER REVISION)

(24) GPS INSTALLATION KIT CONSIST OF THE FOLLOWING:

M24308/2-3F	CONNECTOR
M39029/63-368	SOCKETS
745584-3	SLIDE LATCH (28)
207345-1	BACKSHELL (28)
225334-6	TNC RT ANGLE CONNECTOR
225550-6	TNC STRAIGHT CONNECTOR

(25) SHEILD TERMINATION AS PER CHELTON FLIGHT SYSTEM DOCUMENT NO. 100-045242 EFIS II CABLING AND TERMINATION PROCESS. DNC NO. W2438

(26) LOW ALT SWITCH IS INSTALLED IN HELICOPTERS ONLY.

(27) GS CANCEL SWITCH IS USED ONLY IN A TAWS CLASS "A" INSTALLATION.

(28) REPLACE BACKSHELL P/N 207345-1 SUPPLIED WITH GPS GPS INSTALL KIT WITH ITEM 38 AND THE SLIDE LATCH AND SCREWS WITH ITEM 40 ON THE PARTS LIST.

(29) USE OF MIL-C27500 TWISTED SHIELDED WIRE FOR DESCRETED LINES IS PERMISSIBLE. GND SHIELD AT CONNECTOR END.

(30) CABLES ARE PART OF THE IDU RACK ASSEMBLY.

(31) XX = LENGTH IN INCHES.

(32) REFER TO PARTS LIST ITEMS 34 THRU 37 FOR APPLICABLE IDU MOUNTING TRAY.

(33) SEE INSTALLATION GUIDE 150-045264 FOR SOFTWARE CONFIGURAATION CARD INSTALLATION.

(34) WIRING CODE

1 FD 100 A 22 N W

UNIT NUMBER
1 - #1 SYSTEM
2 - #2 SYSTEM
3 - #3 SYSTEM
4 - #4 SYSTEM

CIRCUIT FUNCTION
SEE TABLE 1

WIRE NUMBER

WIRE COLOR
W - WHITE
B - BLUE
O - ORANGE
BLK - BLACK
R - RED

GROUND

WIRE GUAGE

WIRE SEGMENT

TABLE 1

CA - AUTOPILOT	LI - BACK LIGHTING
EF - FUEL FLOW SYS	MR - SWITCHING SYS
FA - AIR DATA SYS	RD - ADF SYS
FD - EFIS SYS	RM - MARKER SYS
FF - FLIGHT DIRECTOR SYS	RG - ADS-B
FG - AHRS SYS	RN - VHF NAV SYS
FN - GPS SYS	SA - RADIO ALTIMETER
	SS - STORM SCOPE SYS
	ST - TCAD SYS

REVISIONS

REV	DESCRIPTION	DATE	APPROVED	APPROVED
D	INITIAL WULFSBERG RELEASE PER DCN W1894	12/19/02	V. Wallace	
E	UPDATE PART NUMBERS	12/23/02	R. DuRall	

DRAWING CONFIGURATION TABLE

	SENSORS			DISPLAYS				PAGES OF THIS DWG USED													
CONFIG	ADC	GPS	AHRS	IDU1	IDU2	IDU3	IDU4	1	2	3	4	5	6	7	8	9	10	11	12	13	14	15
101	1	1	1	1	0	0	0	X	X	X	X	X	X									X
102	1	1	1	1	1	0	0	X	X	X	X	X	X	X								X
103	2	2	2	1	1	0	0	X	X	X	X	X		X			X	X	X	X	X	X
104	1	1	1	1	1	1	0	X	X	X	X	X	X	X	X							X
105	2	2	2	1	1	1	0	X	X	X	X	X		X	X		X	X	X	X	X	X
106	1	1	1	1	1	1	1	X	X	X	X	X	X	X	X	X						X
107	2	2	2	1	1	1	1	X	X	X	X	X		X	X	X	X	X	X	X	X	X

X = PAGES USED FOR THIS CONFIGURATION

THIS DRAWING CONTAINS PROPRIETARY INFORMATION OF WULFSBERG ELECTRONICS NEITHER RECEIVED, NOR POSSESSION, REVEALS, PRINTS, PUBLISHES, OR OTHERWISE USES, OR PERMITS USE OF THIS DOCUMENT FOR ANY PURPOSE WHATSOEVER WITHOUT WRITTEN AUTHORIZATION FROM WULFSBERG ELECTRONICS.

THIRD ANGLE PROJECTION

NEXT ASSEMBLY | FINAL ASSEMBLY

APPLICATION

TOLERANCES: (ALL DIMENSIONS ARE IN INCHES UNLESS OTHERWISE SPECIFIED) FRACTIONS ±X, DECIMALS .XX±, .XXX±, ANGLES ±X°

MATERIAL

FINISH

DO NOT SCALE DRAWING

TYPED SIGNATURES INDICATE APPROVAL. HANDWRITTEN SIGNATURE APPROVAL OF THIS DOCUMENT IS ON FILE AT WULFSBERG ELECTRONICS, PRESCOTT, ARIZONA.

APPROVALS		DATE
DRAWN	Rosity Harper	07/23/02
ENGINEER	Kevin Compros	07/23/02
CHECKED	Buddy Jackson	07/25/02
ISSUED	Vern Wallace	12/19/02

Wulfsberg Electronics
A Chelton Group Company

W/D EFIS IDU INTERFACE

SIZE	CAGE CODE	DOCUMENT NO.	REV.
B	1B7G3	702-045250	E

SCALE = NONE | SHEET = 1 OF 15

702-045250 | 1 | D

-107	-106	-105	-104	-103	-102	-101	01	-	EFIS IDU INTERFACE	-
4	4	3	3	2	2	1	02	400-045500-0101	IDU	CHELTON
7	7	5	5	3	3	1	03	D38999/26FF35SN	CONNECTOR	CABLE TECH
4	4	3	3	2	2	1	04	M85049/19-19N07	EMI-RFI BACKSHELL	CABLE TECH
4	4	3	3	2	2	1	05	D38999/26FD35SN	CONNECTOR	CABLE TECH
4	4	3	3	2	2	1	06	M85049/19-15N03	EMI-RFI BACKSHELL	CABLE TECH
2	1	2	1	2	1	1	07	962830A-1-S-8	ADC COMPUTER	SHADIN
2	1	2	1	2	1	1	08	6812D1A-1	TEMP PROBE KIT	SHADIN
2	1	2	1	2	1	1	09	MS24266R22B55S	CONNECTOR	QPL
2	1	2	1	2	1	1	10	MS27291-6	BACKSHELL	QPL
2	1	2	1	2	1	1	11	M24308/2-2F	CONNECTOR	QPL
2	1	2	1	2	1	1	12	M85049/48-2-2	BACKSHELL	QPL
4	2	4	2	4	2	2	13	D20419-18	SCREWLOCK (2 PER CONNECTOR)	ITT CANNON
2	1	2	1	2	1	1	14	84100-01-0101	GPS SENSOR	FREEFLIGHT
2	1	2	1	2	1	1	15	1031-4200-01	GPS SENSOR INSTALLATION KIT	FREEFLIGHT
2	1	2	1	2	1	1	16	C1405-100	GPS ANTENNA	COMANT
AR	AR	AR	AR	AR	AR	AR	17	RG142/U	COAX CABLE	QPL
2	1	2	1	2	1	1	18	8350-0062-01	AHRS 500GA-202	CROSS BOW
4	4	3	3	2	2	2	19	CKN4011-NO	AUDIO MUTE SW/ENTER SW	DIGIKEY
1	1	1	1	1	1	1	20	TBD	ANALOG INTERFACE UNIT (AIU)	CHELTON
2	2	2	2	1	1	1	21	400-045600-01	SLIP KIT ASSY	CHELTON
1	1	1	1	1	1	1	22	30628-004 LOW ALT	ANNUNCIATED SWITCH (LOW ALT)	KORRY
1	1	1	1	1	1	1	23	30628-001	ANNUNCIATED SWITCH (TAWS INHIBIT)	KORRY
1	-	1	-	1	-	-	24	30628-008 AHRS 1/AHRS 2	ANNUNCIATED SWITCH (AHRS 1/AHRS 2)	KORRY
1	-	1	-	1	-	-	25	30628-007 ADC 1/ADC 2	ANNUNCIATED SWITCH (ADC 1/ADC 2)	KORRY
1	-	1	-	1	-	-	26	30628-009 GPS 1/GPS 2	ANNUNCIATED SWITCH (GPS 1/GPS 2)	KORRY
1	1	1	1	1	1	1	27	30628-003 GS/CANCEL	ANNUNCIATOR SWITCH (G/S CANCEL)	KORRY
4	-	4	-	4	1	1	28	TJSE20708	DIODE MODULE	PCD (TIN-CO)
-	-	-	-	-	-	1	29	275-1037-ND	KEYBOARD IN LINE JACK	DIGIKEY
1	-	1	-	1	-	-	30	RS12-020	REMOTE SWITCH	NAT
1	-	1	-	1	-	-	31	M24308/2-5F	CONNECTOR	ITT CANNON
1	-	1	-	1	-	-	32	980-2000-349	BACKSHELL	ITT CANNON
1	-	1	-	1	-	-	33	D20-420-13	SCREW LOCKS	ITT CANNON
1	1	1	1	1	1	1	34	401-345515-02	IDU MOUNTING TRAY	CHELTON
3	3	2	2	1	1	-	35	401-345515-03	IDU MOUNTING TRAY	CHELTON
-	-	-	-	-	-	-	36	401-345515-04	IDU MOUNTING TRAY	CHELTON
-	-	-	-	-	-	-	37	401-345515-05	IDU MOUNTING TRAY	CHELTON
2	1	2	1	2	1	1	38	980-2000-347	EMI/RFI BACKSHELL	ITT CANNON
1	1	1	1	1	1	1	39	KB01	KEYBOARD PLUG MOUNT	CHELTON
2	1	2	1	2	1	1	40	745584-1	SLIDE LATCH AND SCREWS	ITT CANNON
3	3	2	2	1	1	-	41	1C96-XX	66 PIN INTERCONNECT CABLE	CHELTON
2	1	2	1	2	1	1	42	54801	ADC MOUNTING TRAY	SHADIN
							ITEM	PART NO.	NOMENCLATURE	SPEC/VENDOR

31 28 28 32 13 14 14 28 13 24

NOTE: SEE SHEET 1, PROPRIETARY NOTES IN THE PAGE AFTER.

Wulfsberg Electronics
A Chelton Group Company

SIZE	CAGE CODE	DOCUMENT NO.	REV.
D	1B7G3	702-045250	E

SCALE = NONE | SHEET = 2 OF 15

DWG NO. 702-045250 SH 2 REV D

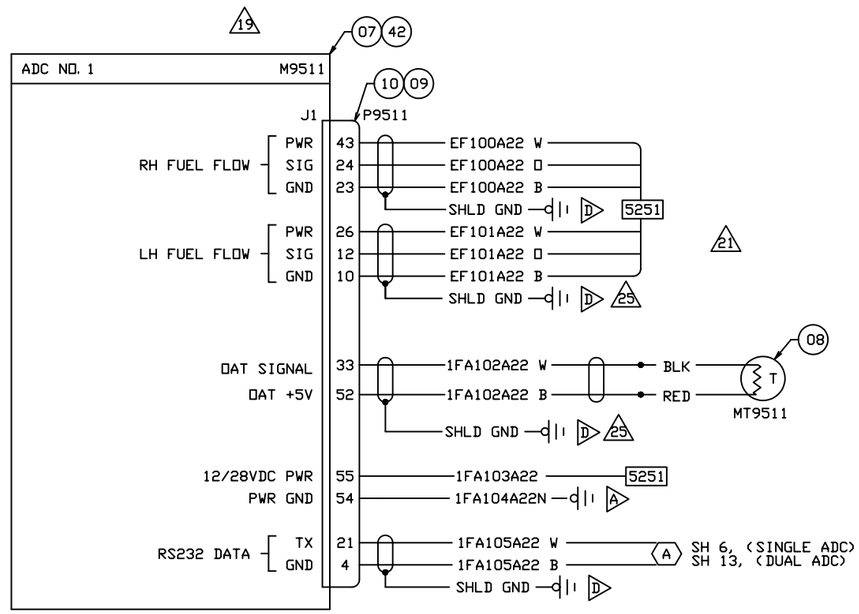

NOTES: SEE SHEET 1.

PROPRIETARY NOTICE ON TITLE PAGE APPLIES.

Wulfsberg Electronics
A Chelton Group Company

SIZE	CAGE CODE	DOCUMENT NO.	REV.
D	1B7G3	702-045250	C
SCALE = NONE			SHEET = 3 OF 15

DWG. NO. 702-045250 SH. 3 REV. C

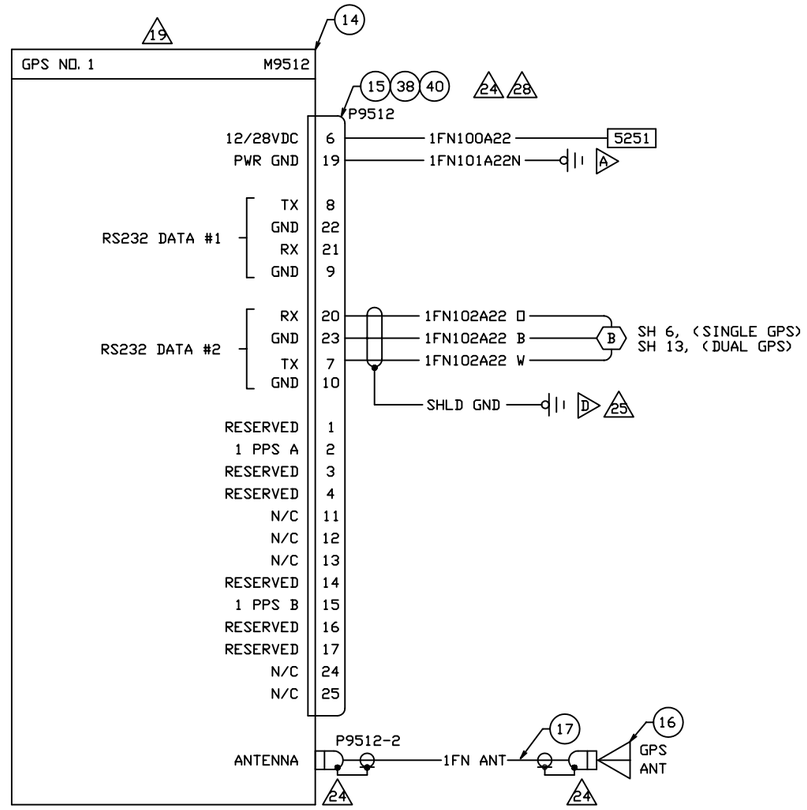

NOTES: SEE SHEET 1.

PROPRIETARY NOTICE ON TITLE PAGE APPLIES.

Wulfsberg Electronics
A Chelton Group Company

SIZE	CAGE CODE	DOCUMENT NO.	REV.
D	1B7G3	702-045250	C
SCALE = NONE			SHEET = 4 OF 15

DWG NO. 702-045250 SH 4 REV C

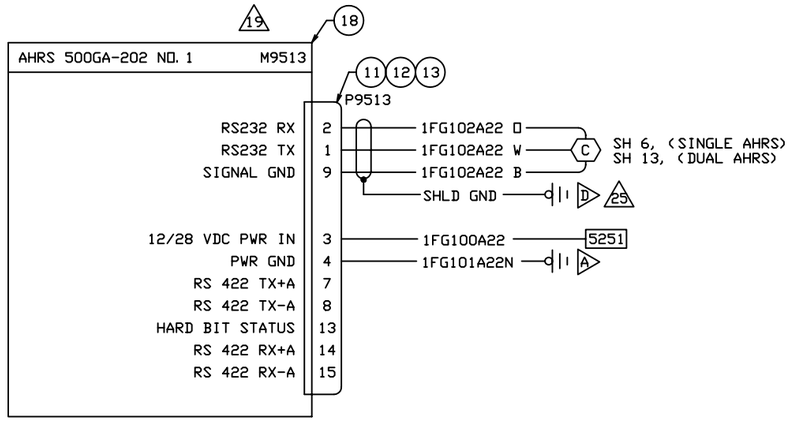

NOTES: SEE SHEET 1.

PROPRIETARY NOTICE ON TITLE PAGE APPLIES.

Wulfsberg Electronics
A Chelton Group Company

SIZE	CAGE CODE	DOCUMENT NO.	REV.
D	1B7G3	702-045250	C
SCALE = NONE			SHEET = 5 OF 15

DWG NO. 702-045250 SH 5 REV C

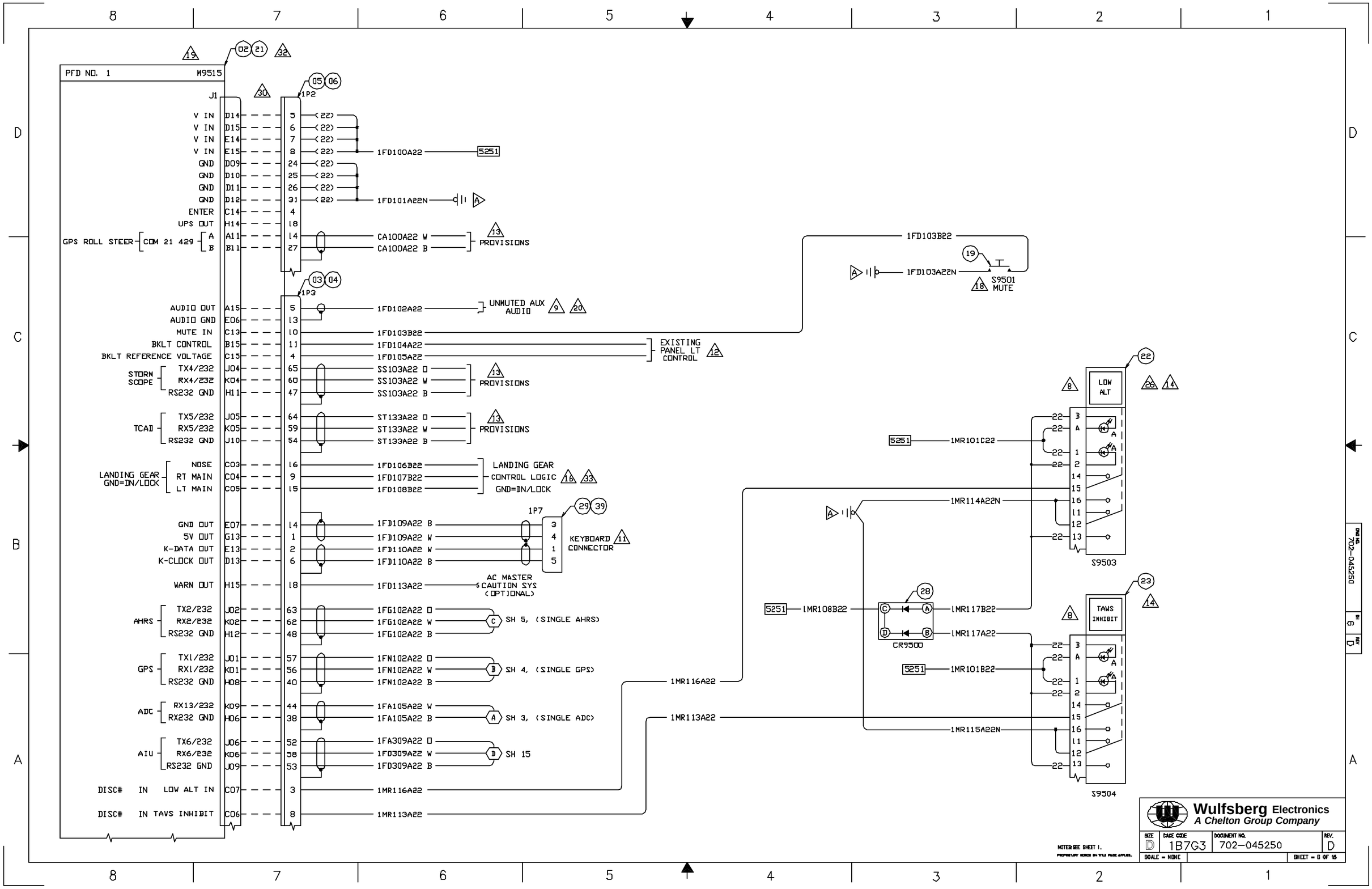
PFD NO. 1
M9515
J1
1P2
1P3
1P7
V IN
GND
ENTER
UPS OUT
GPS ROLL STEER
COM 21 429
AUDIO OUT
AUDIO GND
MUTE IN
BKLT CONTROL
BKLT REFERENCE VOLTAGE
STORM SCOPE
TX4/232
RX4/232
RS232 GND
TCAD
TX5/232
RX5/232
LANDING GEAR GND=DN/LOCK
NOSE
RT MAIN
LT MAIN
GND OUT
5V OUT
K-DATA OUT
K-CLOCK OUT
WARN OUT
AHRS
TX2/232
RX2/232
GPS
TX1/232
RX1/232
ADC
RX13/232
AIU
TX6/232
RX6/232
DISC# IN LOW ALT IN
DISC# IN TAWS INHIBIT
1FD100A22
1FD101A22N
CA100A22 W
CA100A22 B
PROVISIONS
1FD102A22
UNMUTED AUX AUDIO
1FD103B22
1FD103A22N
S9501 MUTE
1FD104A22
1FD105A22
EXISTING PANEL LT CONTROL
SS103A22 D
SS103A22 W
SS103A22 B
ST133A22 D
ST133A22 W
ST133A22 B
1FD106B22
1FD107B22
1FD108B22
LANDING GEAR CONTROL LOGIC GND=DN/LOCK
1FD109A22 B
1FD109A22 W
1FD110A22 W
1FD110A22 B
KEYBOARD CONNECTOR
1FD113A22
AC MASTER CAUTION SYS (OPTIONAL)
1FG102A22 D
1FG102A22 W
1FG102A22 B
SH 5, (SINGLE AHRS)
1FN102A22 D
1FN102A22 W
1FN102A22 B
SH 4, (SINGLE GPS)
1FA105A22 W
1FA105A22 B
SH 3, (SINGLE ADC)
1FA309A22 D
1FD309A22 W
1FD309A22 B
SH 15
1MR116A22
1MR113A22
1MR101C22
1MR114A22N
1MR108B22
1MR117B22
1MR117A22
1MR101B22
1MR115A22N
CR9500
LOW ALT
TAWS INHIBIT
S9503
S9504
NOTE:SEE SHEET 1.
PROPRIETARY NOTICE ON TITLE PAGE APPLIES.
Wulfsberg Electronics
A Chelton Group Company
SIZE D
CAGE CODE 1B7G3
DOCUMENT NO. 702-045250
REV. D
SCALE = NONE
SHEET = 8 OF 15
DWG NO. 702-045250
REV D

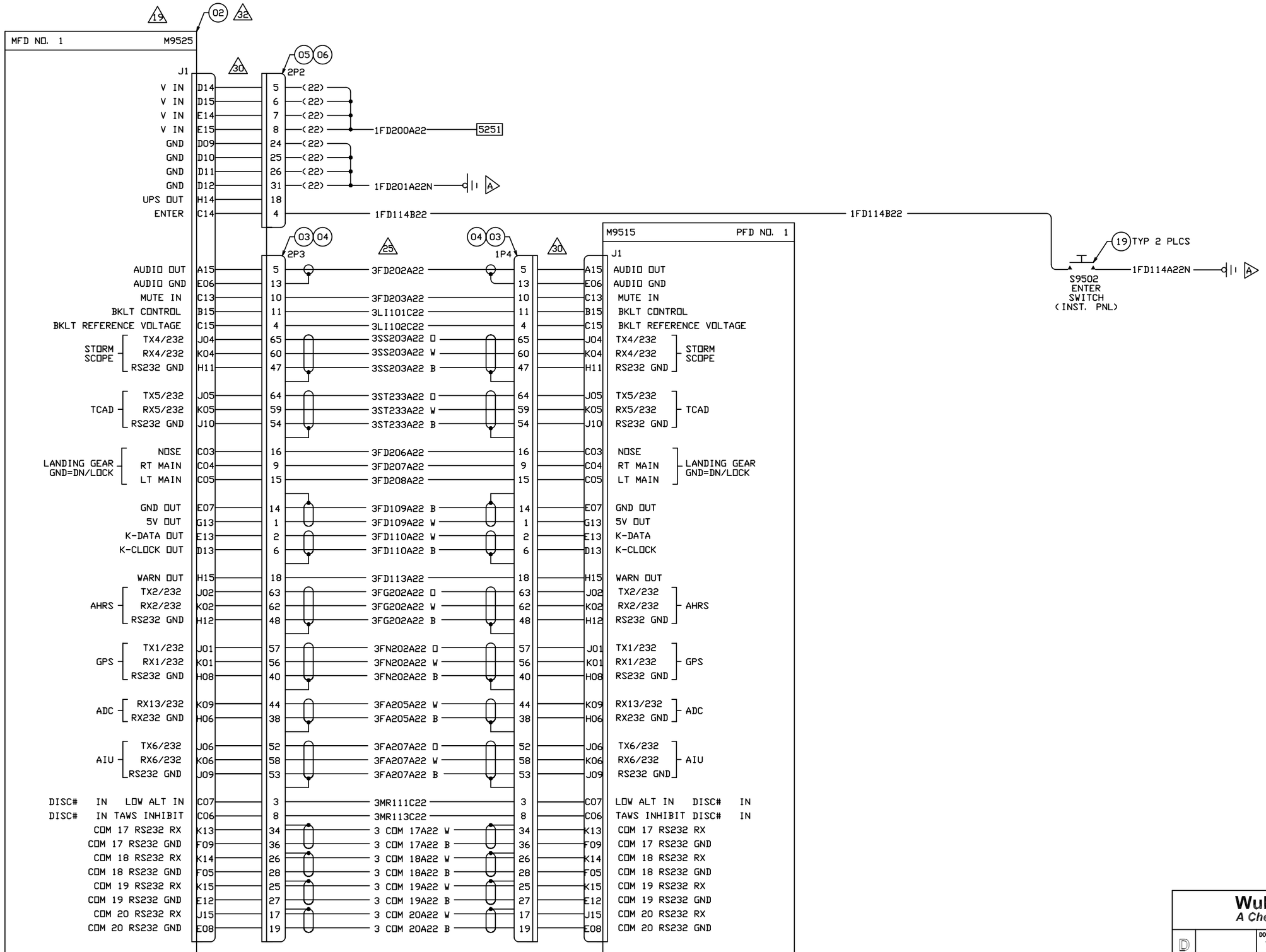

Wulfsberg Electronics
A Chelton Group Company

D		DOCUMENT NO. 702-045250	REV. C
SCALE = NONE			SHEET = 7 OF 15

PROPRIETARY NOTICE ON TITLE PAGE APPLIES.

DWG NO. 702-045250 SH 7 REV C

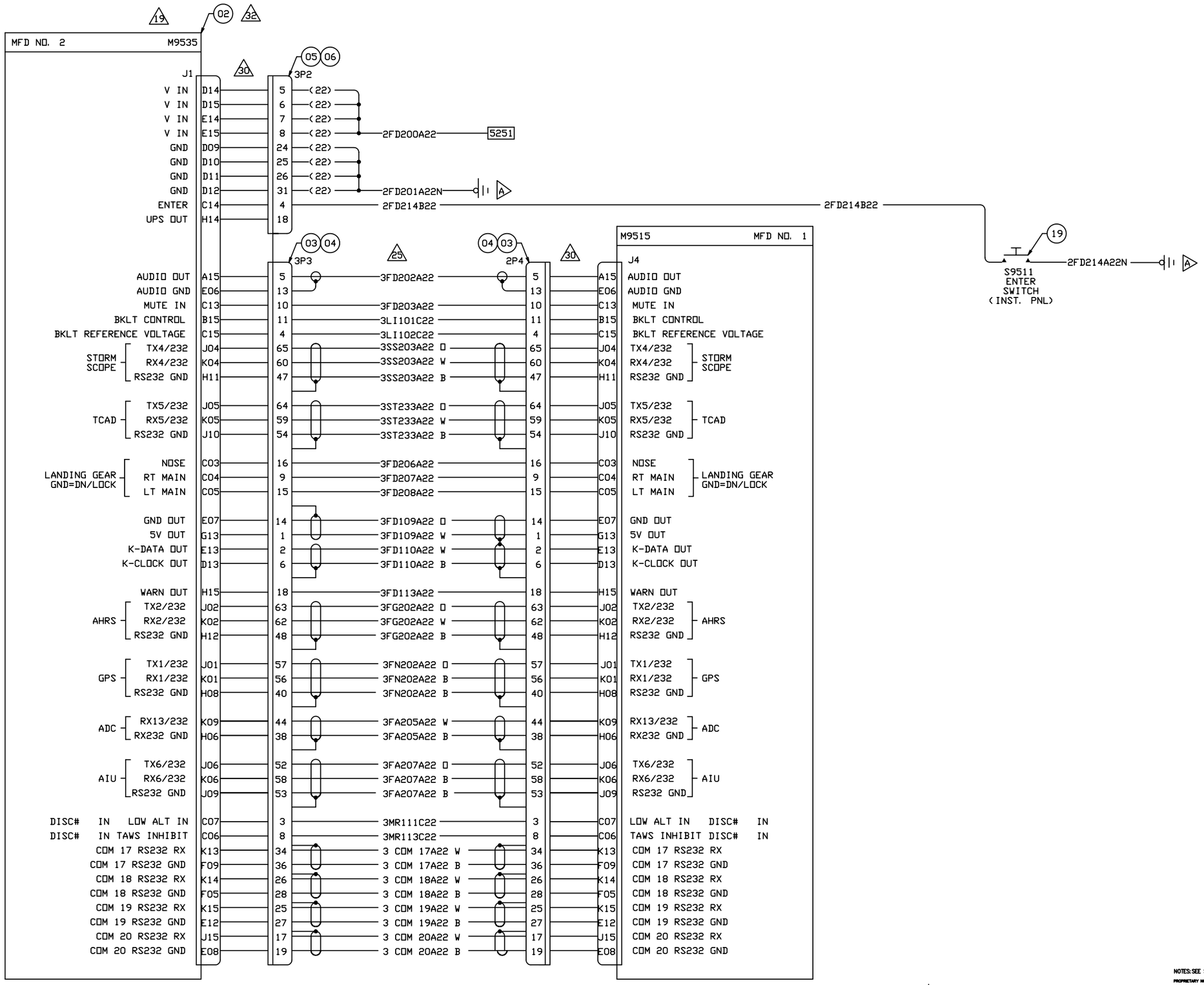

NOTES: SEE SHEET 1.

PROPRIETARY NOTICE ON TITLE PAGE APPLIES.

Wulfsberg Electronics
A Chelton Group Company

SIZE	CAGE CODE	DOCUMENT NO.	REV.
D	1B7G3	702-045250	C

SCALE = NONE | SHEET = 8 OF 15

DWG NO. 702-045250 SH 8 REV C

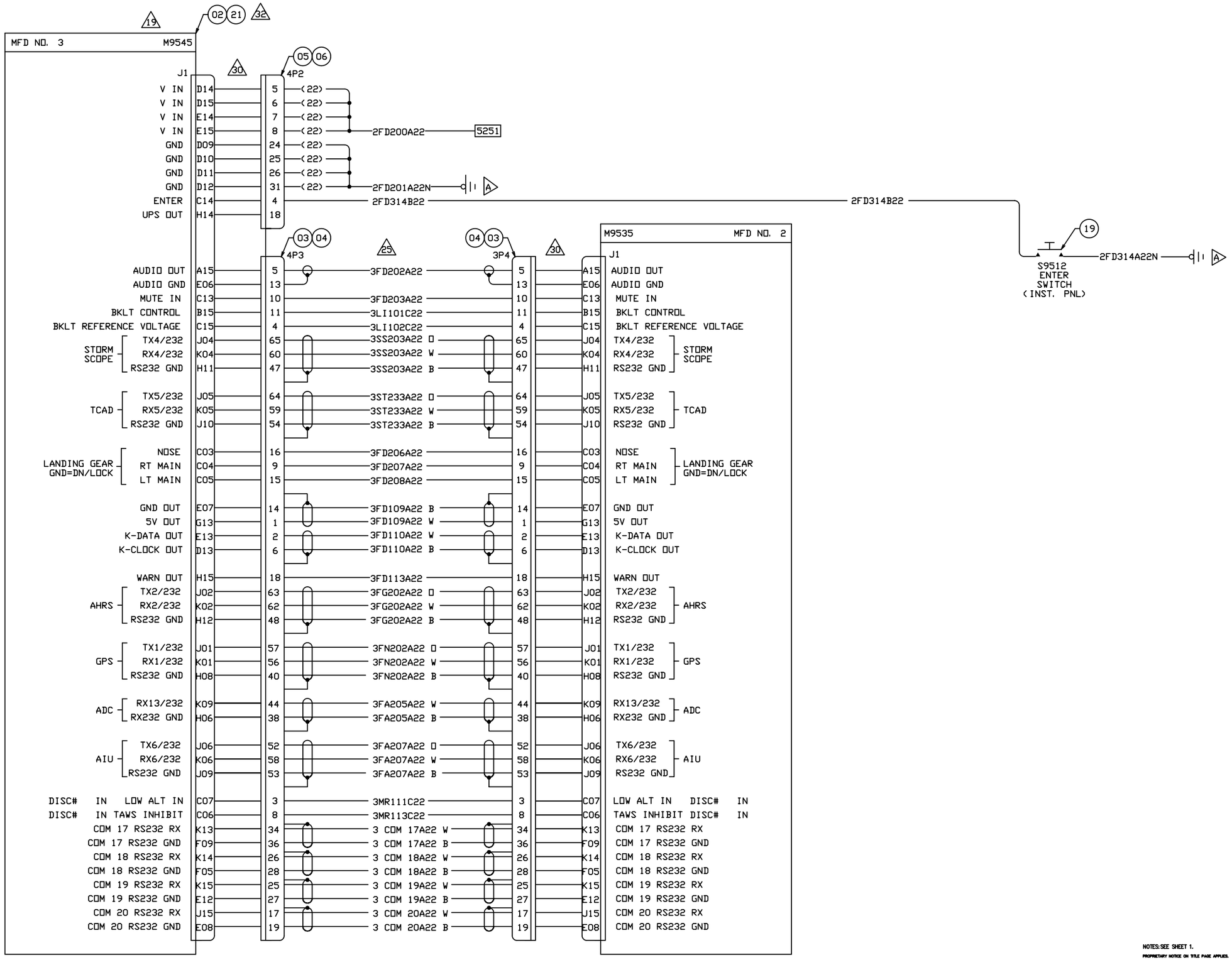

NOTES: SEE SHEET 1.

PROPRIETARY NOTICE ON TITLE PAGE APPLIES.

Wulfsberg Electronics
A Chelton Group Company

SIZE	CAGE CODE	DOCUMENT NO.	REV.
D	1B7G3	702-045250	C

SCALE = NONE | SHEET = 9 OF 15

DWG NO. 702-045250 | SH 9 | REV C

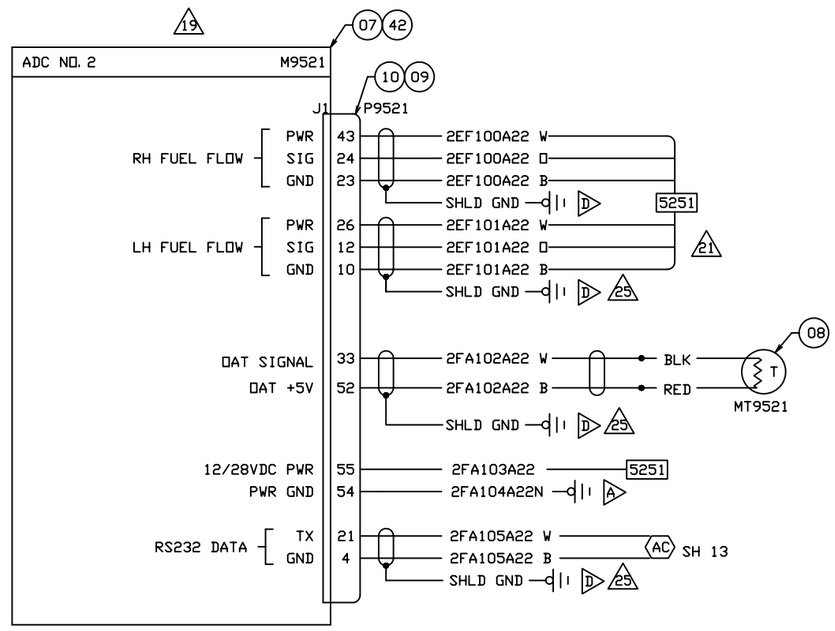

NOTES: SEE SHEET 1.

PROPRIETARY NOTICE ON TITLE PAGE APPLIES.

Wulfsberg Electronics
A Chelton Group Company

SIZE	CAGE CODE	DOCUMENT NO.	REV.
D	1B7G3	702–045250	C
SCALE = NONE			SHEET = 10 OF 15

DWG NO. 702–045250 SH. 10 REV. C

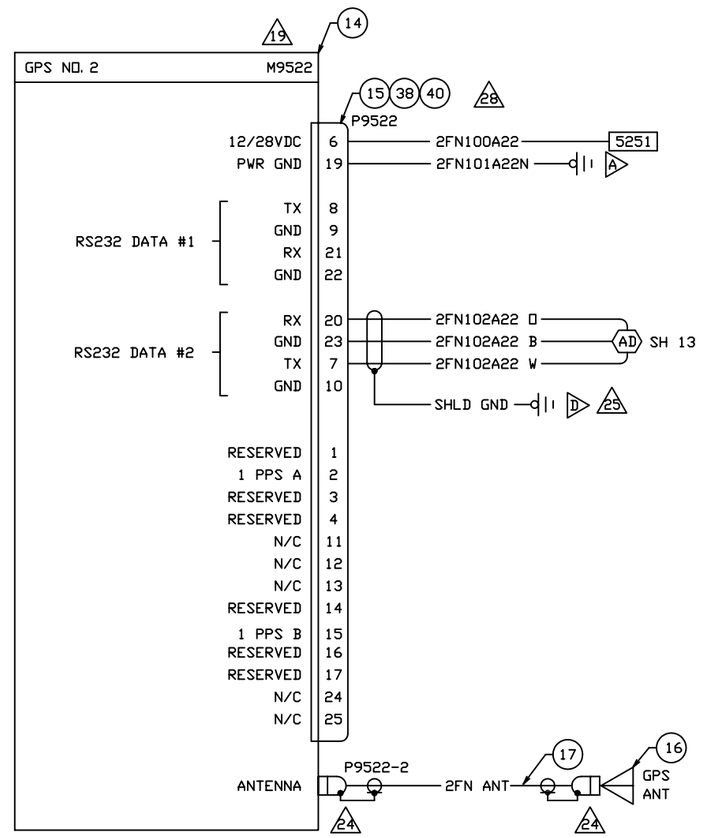

NOTES: SEE SHEET 1.

PROPRIETARY NOTICE ON TITLE PAGE APPLIES.

Wulfsberg Electronics
A Chelton Group Company

SIZE	CAGE CODE	DOCUMENT NO.	REV.
D	1B7G3	702-045250	C
SCALE = NONE			SHEET = 11 OF 15

DWG NO. 702-045250 SH 11 REV C

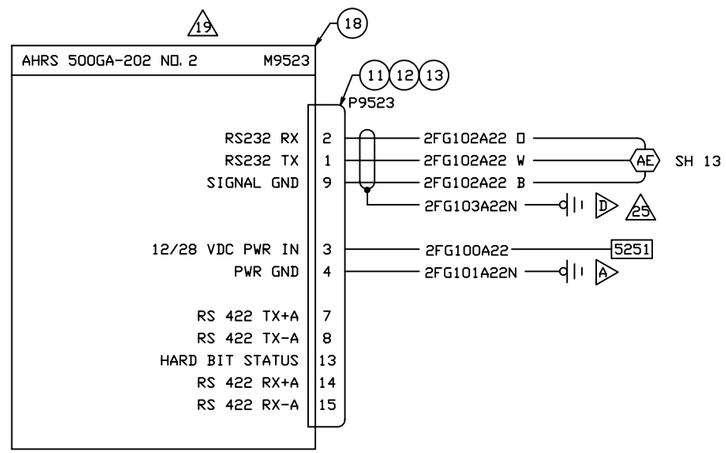

NOTES: SEE SHEET 1.

PROPRIETARY NOTICE ON TITLE PAGE APPLIES.

Wulfsberg Electronics
A Chelton Group Company

SIZE	CAGE CODE	DOCUMENT NO.	REV.
D	1B7G3	702-045250	C
SCALE = NONE			SHEET = 12 OF 15

DWG NO. 702-045250 SH 12 REV C

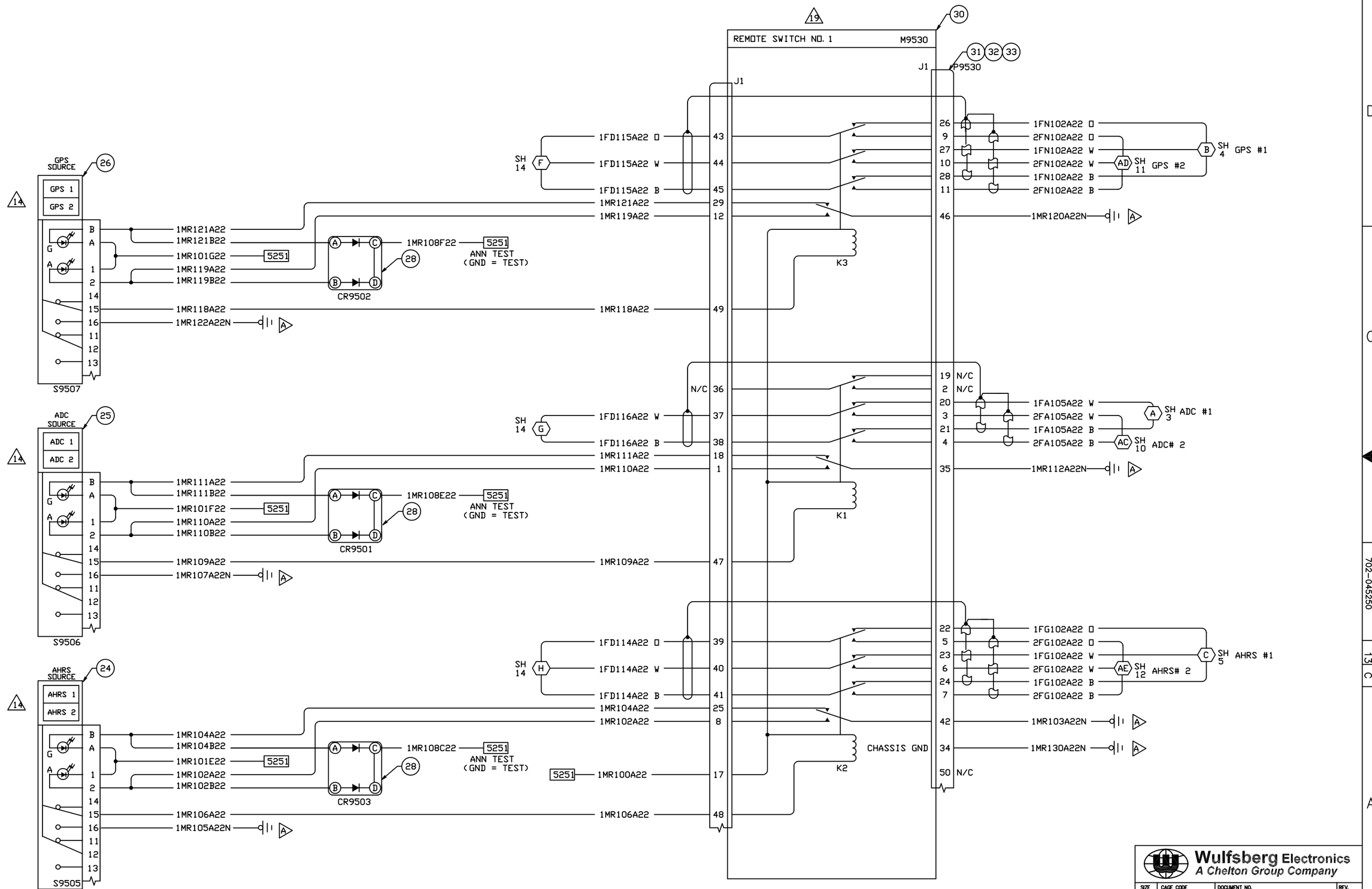

NOTES: SEE SHEET 1.

PROPRIETARY NOTICE ON TITLE PAGE APPLIES.

Wulfsberg Electronics
A Chelton Group Company

SIZE	CAGE CODE	DOCUMENT NO.	REV.
D	1B7G3	702-045250	C
SCALE = NONE			SHEET = 13 OF 15

DWG. NO. 702-045250 SH. 13 REV. C

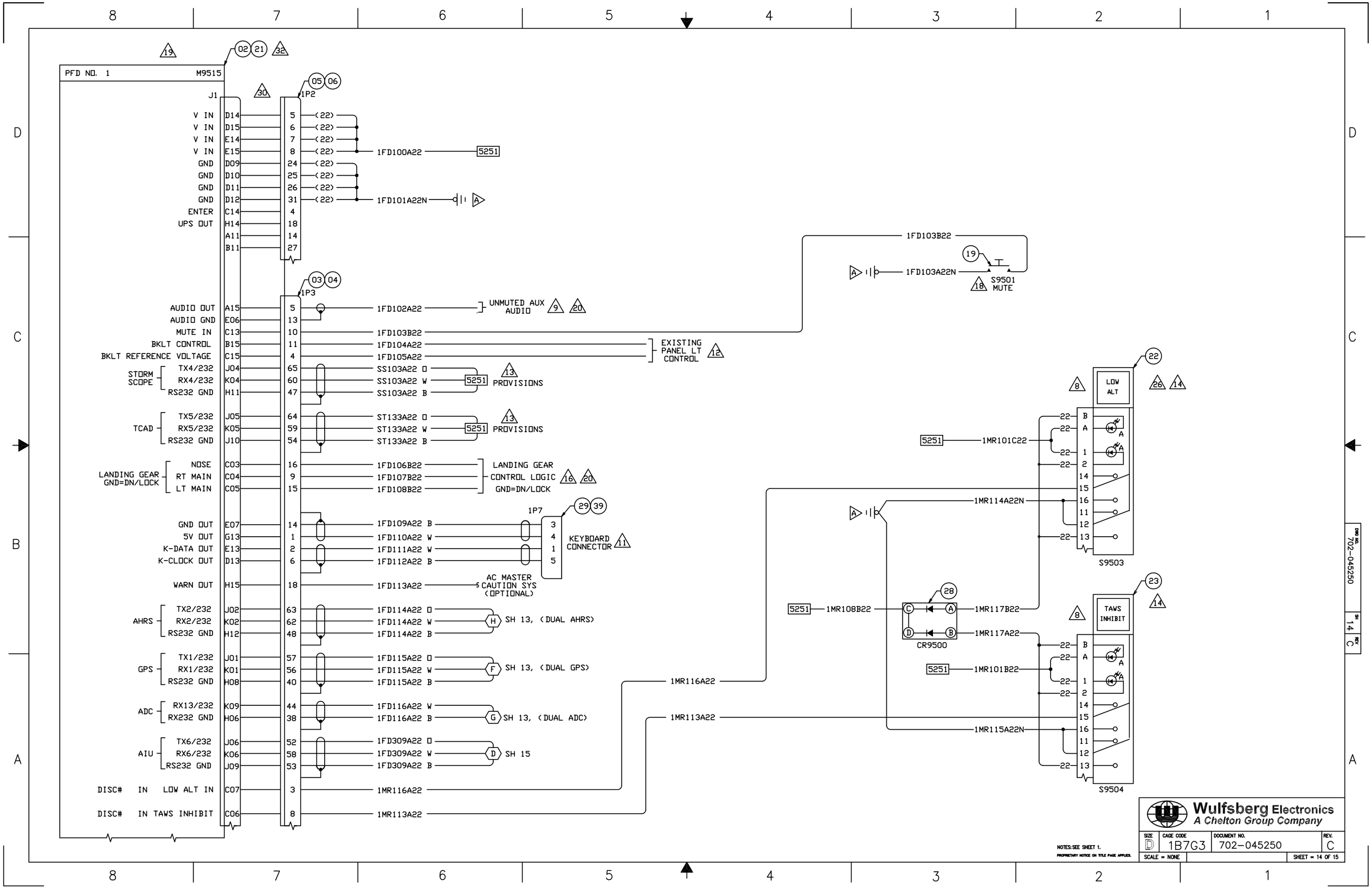
PFD NO. 1
M9515
J1
1P2
1P3
1P7
V IN D14 5
V IN D15 6
V IN E14 7
V IN E15 8
GND D09 24
GND D10 25
GND D11 26
GND D12 31
ENTER C14 4
UPS OUT H14 18
A11 14
B11 27
1FD100A22
5251
1FD101A22N
1FD103B22
1FD103A22N
S9501 MUTE
AUDIO OUT A15 5
AUDIO GND E06 13
MUTE IN C13 10
BKLT CONTROL B15 11
BKLT REFERENCE VOLTAGE C15 4
1FD102A22
UNMUTED AUX AUDIO
1FD103B22
1FD104A22
1FD105A22
EXISTING PANEL LT CONTROL
STORM SCOPE
TX4/232 J04 65
RX4/232 K04 60
RS232 GND H11 47
SS103A22 D
SS103A22 W
SS103A22 B
PROVISIONS
TCAD
TX5/232 J05 64
RX5/232 K05 59
RS232 GND J10 54
ST133A22 D
ST133A22 W
ST133A22 B
LANDING GEAR GND=DN/LOCK
NOSE C03 16
RT MAIN C04 9
LT MAIN C05 15
1FD106B22
1FD107B22
1FD108B22
LANDING GEAR CONTROL LOGIC GND=DN/LOCK
GND OUT E07 14
5V OUT G13 1
K-DATA OUT E13 2
K-CLOCK OUT D13 6
1FD109A22 B
1FD110A22 W
1FD111A22 W
1FD112A22 B
KEYBOARD CONNECTOR
WARN OUT H15 18
1FD113A22
AC MASTER CAUTION SYS (OPTIONAL)
AHRS
TX2/232 J02 63
RX2/232 K02 62
RS232 GND H12 48
1FD114A22 D
1FD114A22 W
1FD114A22 B
SH 13, (DUAL AHRS)
GPS
TX1/232 J01 57
RX1/232 K01 56
RS232 GND H08 40
1FD115A22 D
1FD115A22 W
1FD115A22 B
SH 13, (DUAL GPS)
ADC
RX13/232 K09 44
RX232 GND H06 38
1FD116A22 W
1FD116A22 B
SH 13, (DUAL ADC)
AIU
TX6/232 J06 52
RX6/232 K06 58
RS232 GND J09 53
1FD309A22 D
1FD309A22 W
1FD309A22 B
SH 15
DISC# IN LOW ALT IN C07 3
1MR116A22
DISC# IN TAWS INHIBIT C06 8
1MR113A22
LOW ALT
1MR101C22
1MR114A22N
S9503
1MR108B22
CR9500
1MR117B22
1MR117A22
TAWS INHIBIT
1MR101B22
1MR115A22N
S9504
NOTES: SEE SHEET 1.
PROPRIETARY NOTICE ON TITLE PAGE APPLIES.
Wulfsberg Electronics
A Chelton Group Company
SIZE D
CAGE CODE 1B7G3
DOCUMENT NO. 702-045250
REV. C
SCALE = NONE
SHEET = 14 OF 15
DWG NO. 702-045250
SH 14
REV C

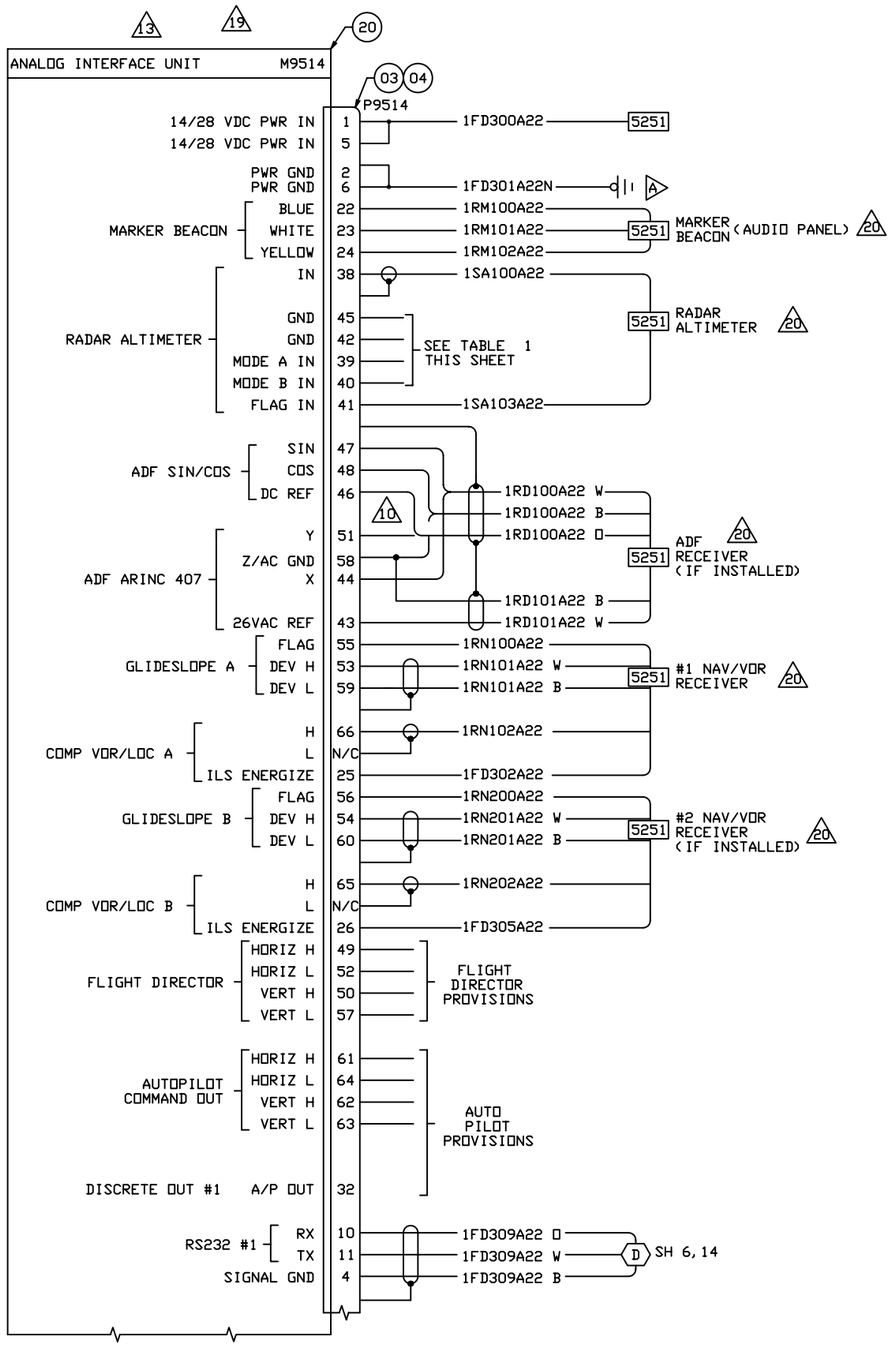

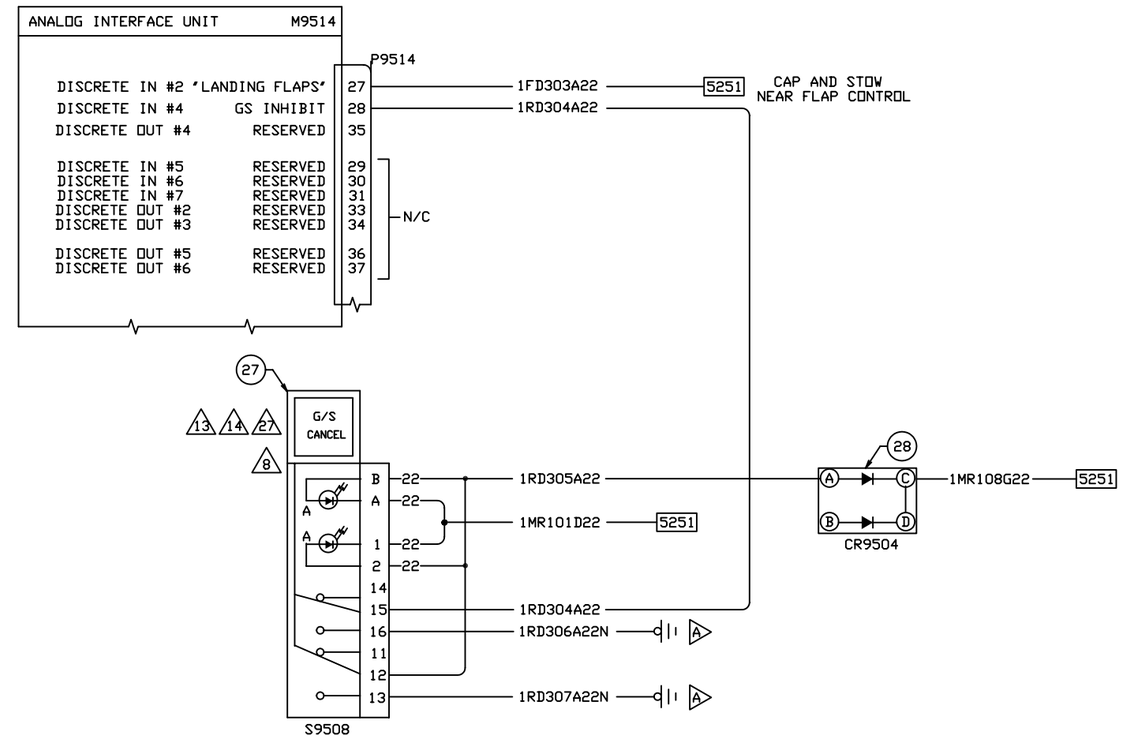

RADIO ALTITUDE IDENT		
39	40	TYPE
0	0	ARINC 552A
0	X	ALT 55
X	0	RESERVED
X	X	NONE
X = GND		
O = OPEN		

TABLE 1

NOTES: SEE SHEET 1.

PROPRIETARY NOTICE ON TITLE PAGE APPLIES.

Wulfsberg Electronics
A Chelton Group Company

SIZE	CAGE CODE	DOCUMENT NO.	REV.
D	1B7G3	702-045250	C

SCALE = NONE SHEET = 15 OF 15

DWG NO. 702-045250 SH 15 REV C