NOTES:

(1) UNLESS NOTED OTHERWISE ALL NEW WIRE TO MEET MIL-W-22759/16 OR LATER REVISION. ALL SHIELDED WIRE TO BE MIL-C-27500E WITH SHIELDS TYPE (T) AND JACKETS TYPE (14). INSTALL WIRING FOLLOWING EXISTING WIRE BUNDLES WHERE PRACTICAL. FOR ADDITIONAL BONDING AND GROUNDING DETAILS REF: AC43-13-1B CHAPTER 11, SECTIONS 9,10,11,& 15.

(2) GROUND NOTES

A DC GND — C SIGNAL GND

B AC GND — D AIRFRAME & SHIELD GND

XX — CHASSIS GND

GROUNDS TO BE AS SHORT AS POSSIBLE UNLESS OTHERWISE INDICATED. GROUNDS UNDER 6 INCHES IN LENGTH DO NOT REQUIRE A WIRE NUMBER. SHIELD PREPARATION SHOULD NOT EXCEED 3 INCHES FROM CONNECTOR. SHIELD GROUNDS MAY BE ACCOMPLISHED BY DAISY CHAINING, SPLICING OR (IND)IVIDUALLY GROUNDING SHIELD TO APPROPRIATE GND DEVICE.

(3) XXX DENOTES REFERENCE TO DWG XXX XXX( ).

(4) REFERS TO LIKE LETTER IN SYMBOL THIS DWG.

(5) ALL WIRES 22AWG UNLESS OTHERWISE SPECIFIED.

(6) ------DENOTES EXISTING AIRCRAFT WIRING OR COMPONENT.

(7) -'-'-'-'- DENOTES OPTIONAL EQUIPMENT.

(8) EFIS MASTER SWITCHES IS LOCATED ON PILOT'S INSTRUMENT PANELS OR OTHER PROMINENT/ACCESSIBLE LOCATION.

(9) REFERENCE FUEL FLOW WIRING TO SHADIN ADC MANUAL 962830A-1-S-8.

(10) THE WIRE GUAGE OF THE EFIS DC FEEDERS MUST MATCH THE A/C 28VDC OR 14VDC FEEDER

(11) USED ONLY IF ANNUNCIATORS AND ANNUNCIATED SWITCH OPTION IS USED.

(12) CONNECT TO EXISTING A/C ANNUNCIATOR TEST BUS. IF AN EXISTING BUS IS NOT AVAILABLE, WIRE AS SHOWN.

(13) IF INSTALLED IN 14 VOLT AIRCRAFT , THE LISTED ITEM NUMBERS PART NUMBERS WILL CHANGE AS SHOWN.

(14) EFIS BAT CIRCUIT BREAKER TO BE MOUNTED ON BATTERY RACK

(15) CONNECT TO NO. 2 GEN BUS IF AVAILABLE, IF NOT CONNECT TO THE NO. 1 GEN BUS

(16) OPTIONAL EQUIPMENT IS NOT USED IN ALL CONFIGURATIONS.

(17) BACKUP BATTERY IS OPTIONAL AND IS NOT USED IN ALL CONFIGURATIONS.

(18) INSTALL ONLY THE CIRCUIT BREAKER FOR THE SPECIFIED CONFIGURATION.

(19) CONNECT FUEL FLOW TRANSDUCER POWER WIRES TOGETHER FOR DUAL ADC INSTALLATION

(20) REF: COMPONENT INSTALL DRAWING NO. 150-045051, FABRICATION OF BATTERY MOUNT.

(21) SMALL PARTS AND ELECTRICAL COMPONENTS REQUIRED FOR INSTALLATION THAT ARE NOT SPECIFICALLY CALLED OUT IN PARTS LIST, SHALL MEET THE REQUIREMENTS FOR AEROSPACE USE AS 'ACCEPTABLE PARTS' OR 'STANDARD PARTS'. SELECTION OF THESE PARTS SHALL BE IN ACCORDANCE WITH GUIDANCE PROVIDED IN FAA ADVISORY CIRCULAR 20-62D DATED 5/24/96 (OR LATER REVISION)

(22) CONNECT TO EXISTING AIRCRAFT SYSTEMS AS SHOWN IN VENDOR'S MANUAL.

(23) IN 14 VOLT AC WIRE 1PS103A10 IS CONNECTED TO THE POSITIVE BATTERY TERMINAL WITH WIRE 1PS101AA10.

(24) IF A/C HAS TWO DC BUSES THESE COMPONENTS WILL BE POWERED FROM THE #2 BUS AS SHOWN ON SH 7 EXCEPT CONFIGURATION 103.

(25) IF 15 AMP TOGGLE BREAKER IS USED AS A EFIS MASTER, SHEET 4 AND 5 ARE NOT USED. INSTALL EFIS PWR ON ANNUNICATORS AS REQUIRED. ANNUNICATOR POWER CIRCUIT BREAKER IS POWERED FROM EFIS BUS.

(26) JUMPER NOT USED IF A/C HAS 2 DC BUSES.

(27) PFD INSTALLATION KIT SHOWN ON DRAWING 702-045250

(28) REFER TO CHELTON FLIGHT SYSTEMS FIELD SERVICE NOTICE: EFIS-II INSTALLATION FOR ALTERNATE ANNUNCIATOR PART NUMBERS

(29) REFER TO APPROPRIATE PARTS LIST FOR AIRCRAFT VOLTAGE

(30) EFIS MASTER BREAKER SWITCH OR EFIS BUS CIRCUIT BERAKER MUST BE EQUAL TO OR GREATER THAN TOTAL CURRENT DRAW OF THE BUS AS CALCULATED BY ADDING ALL BUS BREAKER VALUES

(31) REFER TO AIU INSTALLATION MANUAL 57D-7000

REVISIONS

REV	DESCRIPTION	DATE	APPROVED	APPROVED
D	INITIAL WULFSBERG RELEASE PER DCN W1894	12-19-02	V. Wallace	
E	UPDATE PARTS LISTS REMOVED SH9 AND ADJUSTED PER DCN W2657	02/19/03	V. Wallace	R. Durall
F	REMOVED EFIS PWR ON ANNUN FROM STANDARD INSTALL PER DCN W2704	02/26/03	V. Wallace	R. Durall
G	ADDED ALTERNATE GEAR CIRCUIT AND ADC MOD TO PAGE 8 PER DCN W2752	03/28/03	V. Wallace	R. Durall
H	ADDED OPTIONAL ANNUNCIATION AND UPDATED WIRING NUMBERS PER DCN W2800	05/20/03	V. Wallace	R. Durall
J	ADDED OPTIONAL IDU BACKLIGHT CIRCUIT PER DCN W2864	05/29/03	V. Wallace	R. Durall
K	MODIFIED FUEL FLOW LABELS AND WIRE CODES PER DCN W2908	06/18/03	V. Wallace	R. Durall
L	ADDED AIU INTERFACE AND MODIFIED BACKLIGHT CIRCUIT AND MODIFIED LDG. GEAR CIRCUIT PER DCN W3268	12/22/03	R. Talken	R. Durall

STANDARD CONFIGURATION

X = PAGE IS USED FOR THIS CONFIGURATION
- = PAGE IS NOT USED FOR THIS CONFIGURATION

CONFIG	PAGES OF THIS DWG USED 1	2	3	4	5	6	7	8	9
101	X	X	-	-	-	X	-	X	-
102	X	X	-	-	-	X	-	X	-
103 (24)	X	X	-	-	-	X	-	X	-
104	X	X	-	-	-	X	-	X	-
105	X	X	-	-	-	X	X	X	-
106	X	X	-	X	-	X	-	X	-
107	X	X	-	X	X	X	X	X	-

(25)

(17) OPTIONAL CONFIGURATION WITH BACKUP BATTERY

X = PAGE IS USED FOR THIS CONFIGURATION
- = PAGE IS NOT USED FOR THIS CONFIGURATION

CONFIG	PAGES OF THIS DWG USED 1	2	3	4	5	6	7	8	9
101	X	-	X	-	-	X	-	X	X
102	X	-	X	-	-	X	-	X	X
103 (24)	X	-	X	-	-	X	-	X	X
104	X	-	X	-	-	X	-	X	X
105	X	-	X	-	-	X	X	X	X
106	X	-	X	-	-	X	-	X	X
107	X	-	X	-	X	X	X	X	X

(25)

DWG NO. 702-045251 SH 1 REV L

THIRD ANGLE PROJECTION

NEXT ASSEMBLY | FINAL ASSEMBLY

APPLICATION

TOLERANCES: (ALL DIMENSIONS ARE IN INCHES UNLESS OTHERWISE SPECIFIED)
FRACTIONS ±X DECIMALS .XX± .XXX± ANGLES ±X°

MATERIAL

FINISH

DO NOT SCALE DRAWING

TYPED SIGNATURES INDICATE APPROVAL. HANDWRITTEN SIGNATURE APPROVAL OF THIS DOCUMENT IS ON FILE AT WULFSBERG ELECTRONICS, PRESCOTT, ARIZONA.

APPROVALS	DATE
DRAWN	
ENGINEER	
CHECKED	
ISSUED	

Wulfsberg Electronics
A Chelton Group Company

W/D AIRCRAFT SYSTEM INTERFACE

SIZE	CAGE CODE	DOCUMENT NO.	REV.
B	1B7G3	702-045251	L

SCALE = NONE | SHEET = 1 OF 9

THIS DOCUMENT CONTAINS PROPRIETARY INFORMATION OF WULFSBERG ELECTRONICS NOTHING PERMITTED HERE MAY BE REPRODUCED, PARTIALLY OR IN WHOLE, WITHOUT WRITTEN AUTHORIZATION FROM WULFSBERG ELECTRONICS.

PARTS LIST - 14 VDC AIRCRAFT

ITEM	PART NO.	NOMENCLATURE	SPEC/VENDOR
20	7270-1-15 (OR EQUIVALENT)	TOGGLE BREAKER	KLIXON
16	30628-105 ON, BATT	ANNUNCIATOR	KORRY
15	30628-102 EFIS, PWR, ON	ANNUNCIATOR	KORRY
13	KC-D4R (OR EQUIVALENT)	RELAY 12V 3P 25AMP	LEACH
12	SO-1057-8912	RELAY SOCKET	LEACH
10	1N5338 (OR EQUIVALENT)	ZENER DIODE	DIGIKEY
05	7274-11-15 (OR EQUIVALENT)	CIRCUIT BREAKER	KLIXON
04	7274-11-5 (OR EQUIVALENT)	CIRCUIT BREAKER	KLIXON

STANDARD CONFIGURATION

PARTS LIST - 28 VDC AIRCRAFT

-107	-106	-105	-104	-103	-102	-101	ITEM	PART NO.	NOMENCLATURE	SPEC/VENDOR
AR	AR	AR	AR	AR	AR	AR	20	7270-1-15 (OR EQUIVALENT)	TOGGLE BREAKER	KLIXON
							19			
AR	AR	AR	AR	AR	AR	AR	18	7401SYZQE	TOGGLE SWITCH 4PDT	C&K
1	-	1	-	-	-	-	17	M81714/60-22-01	TERMINAL BLOCK	QPL
2	1	2	1	1	1	1	16	30628-005 ON, BATT	ANNUNCIATOR	KORRY
1	-	1	-	-	-	-	15	30628-002 EFIS, PWR, ON	ANNUNCIATOR	KORRY
2	1	2	1	1	1	1	14	8511K9 (OR EQUIVALENT)	SWITCH 2P TOGGLE	EATON
2	1	2	1	2	1	1	13	KC-D4N (OR EQUIVALENT)	RELAY 28V 3P 25AMP	LEACH
2	1	2	1	2	1	1	12	SO-1057-8912	RELAY SOCKET	LEACH
5	2	5	2	2	2	2	11	TJSE20707 (OR EQUIVALENT)	DIODE MODULE	PCD
AR	AR	AR	AR	AR	AR	AR	10	1N4001 (OR EQUIVALENT)	DIODE	AR
AR	AR	AR	AR	AR	AR	AR	09	53CAA-B28-B15 (OR EQUIVALENT)	POTENTIOMETER 10K 1/2 W	BOURNS
1	1	1	1	1	1	1	08	149-045264-01	INSTALLATION KIT, PFD	CHELTON
							07			
4	4	4	2	2	2	2	06	7274-11-10	CIRCUIT BREAKER	KLIXON
AR	AR	AR	AR	AR	AR	AR	05	7274-11-15	CIRCUIT BREAKER	KLIXON
4	4	3	3	2	2	1	04	7274-11-3	CIRCUIT BREAKER	KLIXON
5	3	5	3	4	3	3	03	7274-11-2	CIRCUIT BREAKER	KLIXON
6	3	6	3	6	3	3	02	7274-11-1	CIRCUIT BREAKER	KLIXON
						-	01	-	AIRCRAFT SYSTEM INTERFACE	-

NOTES: SEE SHEET 1.
PROPRIETARY NOTICE ON TITLE PAGE APPLIES.

Wulfsberg Electronics
A Chelton Group Company

SIZE	CAGE CODE	DOCUMENT NO.	REV.
B	1B7G3	702-045251	L

SCALE = NONE SHEET = 2 OF 9

DWG No. 702-045251 SH 2 REV L

PARTS LIST - 14 VDC AIRCRAFT

ITEM	PART NO.	NOMENCLATURE	SPEC/VENDOR
24	(TO BE FABRICATED)	BATTERY MOUNT	-
23	NA	-	-
22	PS121BO (OR EQUIVALENT)	12V BATTERY	POWER SONIC
21	30628-106 BAT, ON/BAT, ARM	ANNUNCIATOR	KORRY
20	7270-1-15 (OR EQUIVALENT)	CIRCUIT BRKR TOGGLE	KLIXON
16	30628-105 ON/BATT	ANNUNCIATOR	KORRY
15	30628-102 EFIS, PWR, ON	ANNUNCIATOR	KORRY
13	KC-D4R (OR EQUIVALENT)	RELAY 12V 3P 25AMP	LEACH
12	SO-1057-8912	RELAY SOCKET	LEACH
10	1N5338 (OR EQUIVALENT)	ZENER DIODE	DIGIKEY
05	7274-11-15 (OR EQUIVALENT)	CIRCUIT BREAKER	KLIXON
04	7274-11-5 (OR EQUIVALENT)	CIRCUIT BREAKER	KLIXON

OPTIONAL CONFIGURATION WITH BACKUP BATTERY

PARTS LIST - 28 VDC AIRCRAFT

-107	-106	-105	-104	-103	-102	-101	ITEM	PART NO.	NOMENCLATURE	SPEC/VENDOR
							28			
							25			
AR	AR	AR	AR	AR	AR	AR	24	100-1035-01	RACK	SECURE PLANE
AR	AR	AR	AR	AR	AR	AR	23	345-111-01	CONNECTOR	SECURE PLANE
AR	AR	AR	AR	AR	AR	AR	22	100-2410-01 (OR EQUIVALENT)	XL 2410 BATTERY	SECURE PLANE
AR	AR	AR	AR	AR	AR	AR	21	30628-006 BAT, ON/BAT, ARM	ANNUNCIATOR	KORRY
AR	AR	AR	AR	AR	AR	AR	20	7270-1-15 (OR EQUIVALENT)	CIRCUIT BRKR TOGGLE	KLIXON
							19			
							18			
1	-	1	-	-	-	-	17	M81714/60-22-01 (OR EQUIVALENT)	TERMINAL BLOCK	QPL
2	1	2	1	1	1	1	16	30628-005 ON, BATT	ANNUNCIATOR	KORRY
1	-	1	-	-	-	-	15	30628-002 EFIS, PWR, ON	ANNUNCIATOR	KORRY
2	1	2	1	1	1	1	14	8511K9 (OR EQUIVALENT)	SWITCH 2P TOGGLE	EATON
2	1	2	1	1	1	1	13	KC-D4N (OR EQUIVALENT)	RELAY 28V 3P 25AMP	LEACH
2	1	2	1	1	1	1	12	SO-1057-8912 (OR EQUIVALENT)	RELAY SOCKET	LEACH
5	3	5	3	3	3	3	11	TJSE20707 (OR EQUIVALENT)	DIODE MODULE	PCD
							10			
							09			
1	1	1	1	1	1	1	08	149-045264-01	INSTALLATION KIT, PFD	CHELTON
							07			
3	1	3	1	1	1	1	06	7274-11-10 (OR EQUIVALENT)	CIRCUIT BREAKER	KLIXON
2	2	2	2	2	2	2	05	7274-11-15 (OR EQUIVALENT)	CIRCUIT BREAKER	KLIXON
4	4	3	3	2	2	1	04	7274-11-3 (OR EQUIVALENT)	CIRCUIT BREAKER	KLIXON
5	3	5	3	4	3	3	03	7274-11-2 (OR EQUIVALENT)	CIRCUIT BREAKER	KLIXON
6	3	6	3	6	3	3	02	7274-11-1 (OR EQUIVALENT)	CIRCUIT BREAKER	KLIXON
						-	01	-	AIRCRAFT SYSTEM INTERFACE	-

NOTES: SEE SHEET 1.

PROPRIETARY NOTICE ON TITLE PAGE APPLIES

Wulfsberg Electronics
A Chelton Group Company

SIZE	CAGE CODE	DOCUMENT NO.	REV.
B	1B7G3	702-045251	L

SCALE = NONE | SHEET = 3 OF 9

DWG NO. 702-045251 SH 3 REV L

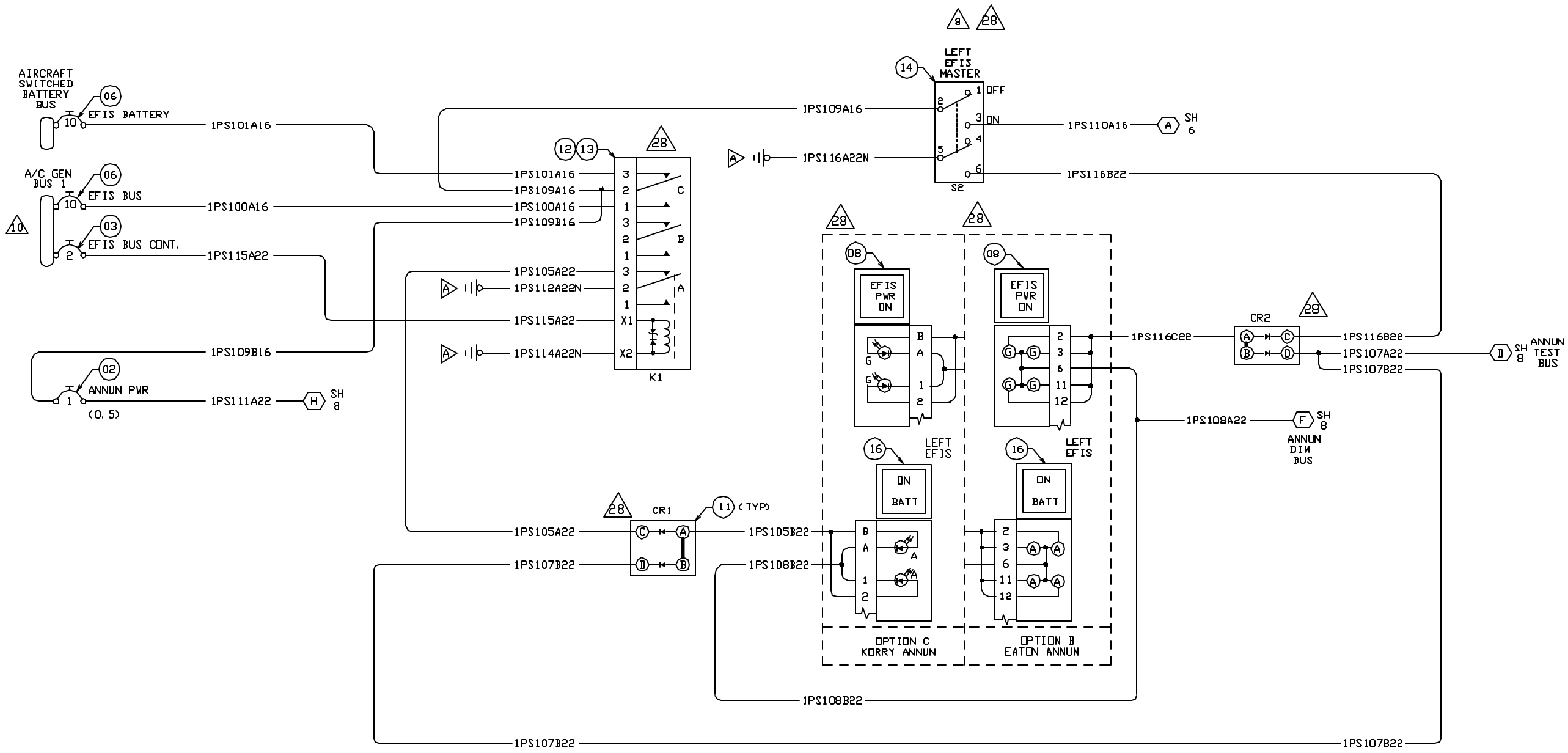

NOTE: SEE SHEET 1.

PROPRIETARY NOTICE ON THE FIRST APPLIES.

Wulfsberg Electronics
A Chelton Group Company

SIZE	CAGE CODE	DOCUMENT NO.	REV.
B	1B7G3	702-045251	L

SCALE = NONE | SHEET = 4 OF 8

DWG NO. 702-045251 SH. 4 REV. L

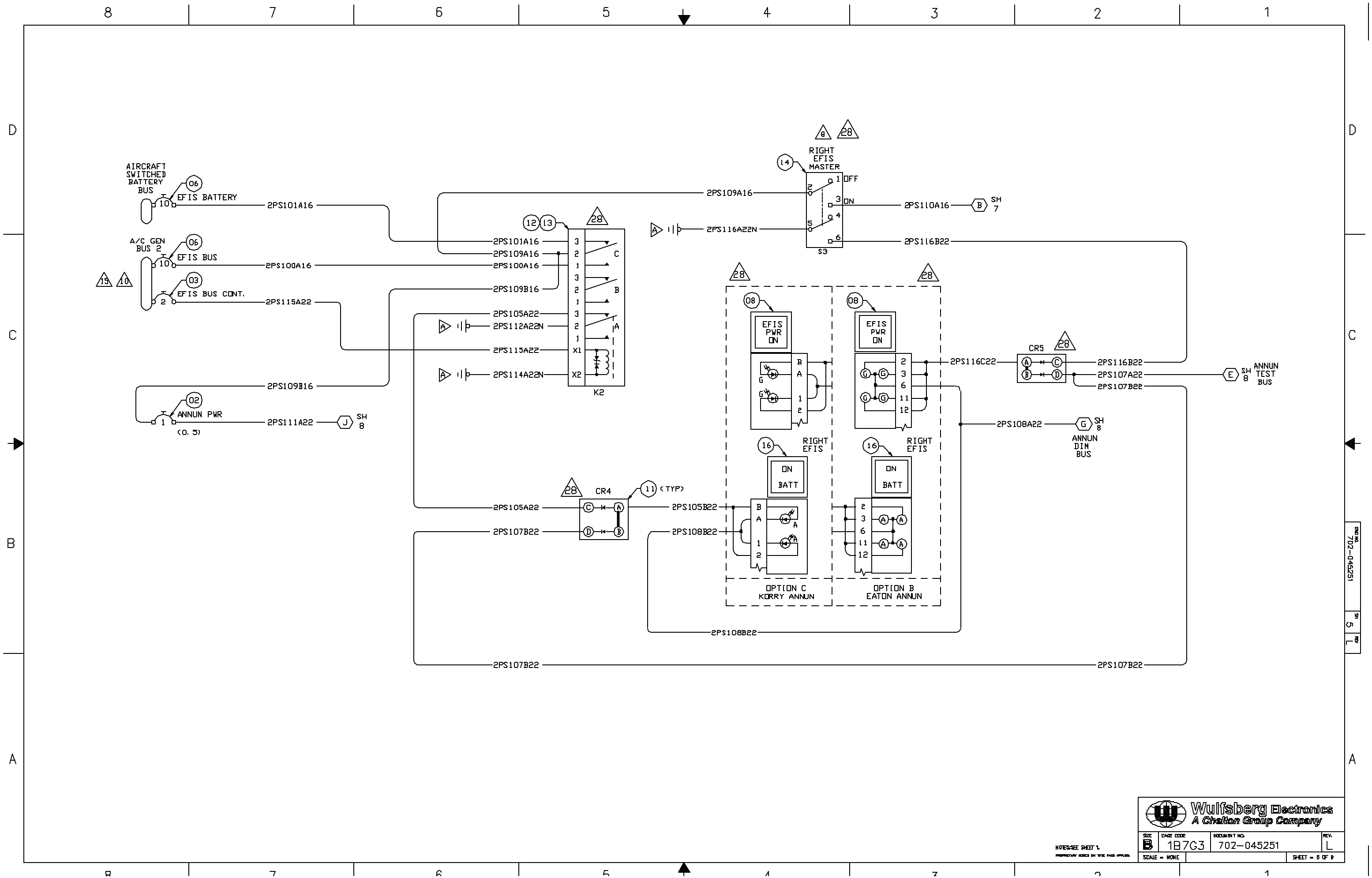
AIRCRAFT SWITCHED BATTERY BUS
EFIS BATTERY
A/C GEN BUS 2
EFIS BUS
EFIS BUS CONT.
ANNUN PWR
(0.5)
2PS101A16
2PS100A16
2PS115A22
2PS109B16
2PS111A22
SH 8
K2
RIGHT EFIS MASTER
OFF
ON
S3
2PS109A16
2PS116A22N
2PS110A16
SH 7
2PS116B22
EFIS PWR ON
RIGHT EFIS
ON
BATT
OPTION C
KORRY ANNUN
OPTION B
EATON ANNUN
CR5
2PS116C22
2PS107A22
2PS107B22
ANNUN TEST BUS
2PS108A22
ANNUN DIN BUS
CR4
(TYP)
2PS105A22
2PS107B22
2PS105B22
2PS108B22
2PS108B22
2PS107B22
2PS107B22
NOTES:SEE SHEET 1.
Wulfsberg Electronics
A Chelton Group Company
SIZE B
CAGE CODE 1B7G3
DOCUMENT NO. 702-045251
REV. L
SCALE = NONE
SHEET = 5 OF 9
DWG NO. 702-045251
SH 5
REV L

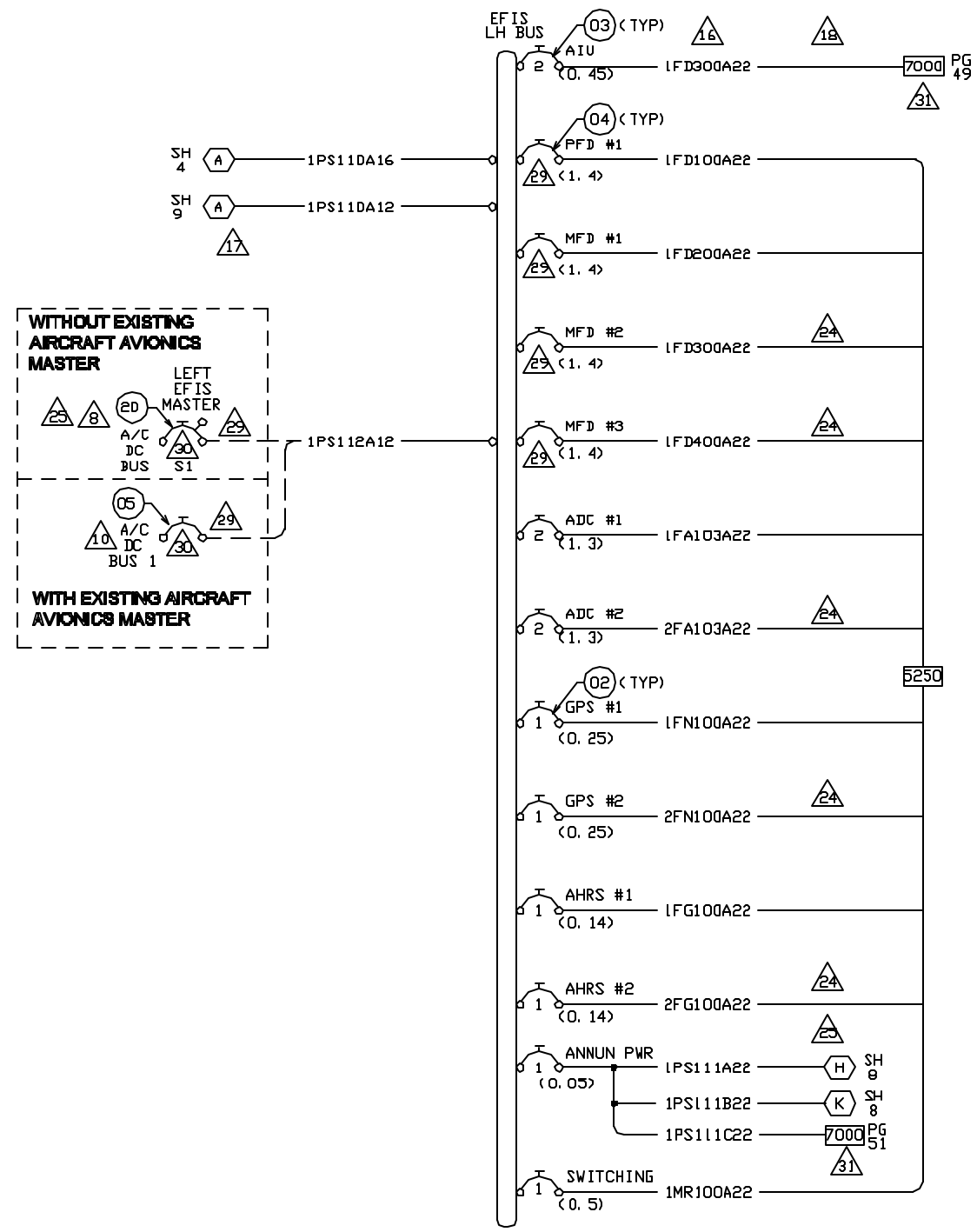

NOTES: SEE SHEET 1.
PROPRIETARY NOTICE ON TITLE PAGE APPLIES.

Wulfsberg Electronics
A Chelton Group Company

SIZE	CAGE CODE	DOCUMENT NO.	REV.
B	1B7G3	702-045251	L

SCALE = NONE

SHEET = 8 OF 9

DWG NO. 702-045251 SH 6 REV L

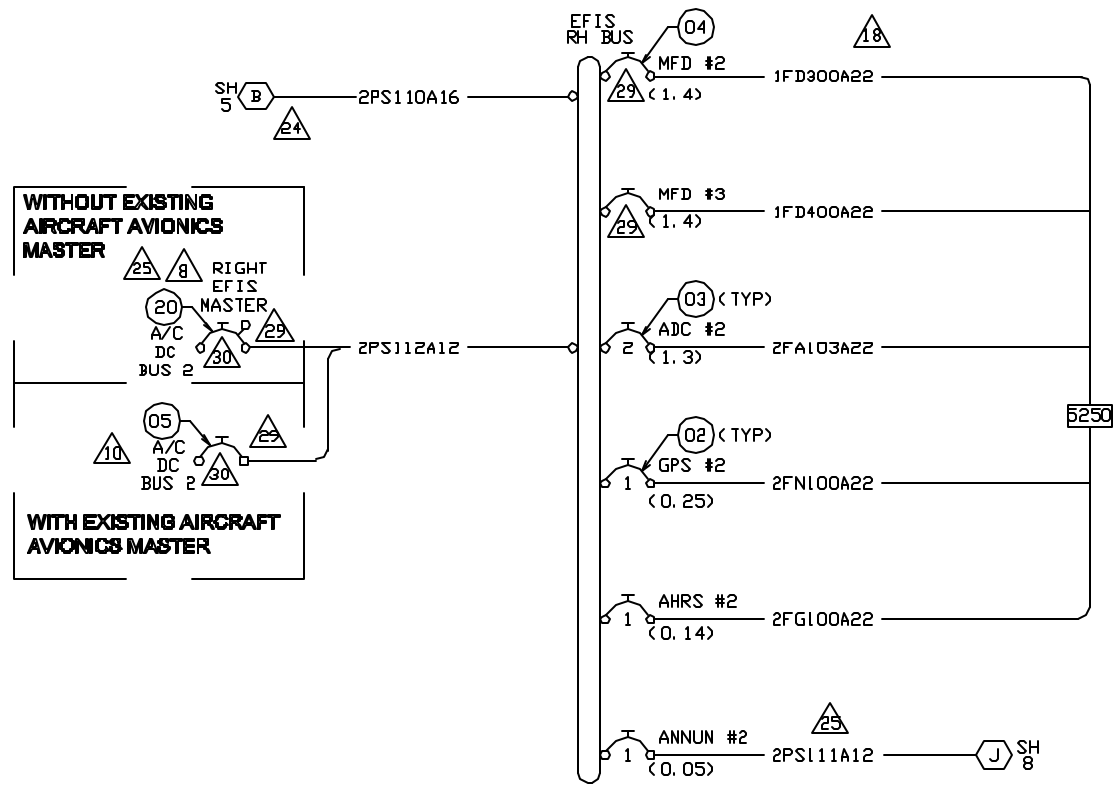

NOTES: SEE SHEET 1.

PREFERRED NOTES ON THE FIRE APPLIES.

Wulfsberg Electronics
A Chelton Group Company

SIZE	CAGE CODE	DOCUMENT NO.	REV.
B	1B7G3	702-045251	L

SCALE = NONE | SHEET = 7 OF 9

DWG NO. 702-045251 | SH. 7 | REV. L

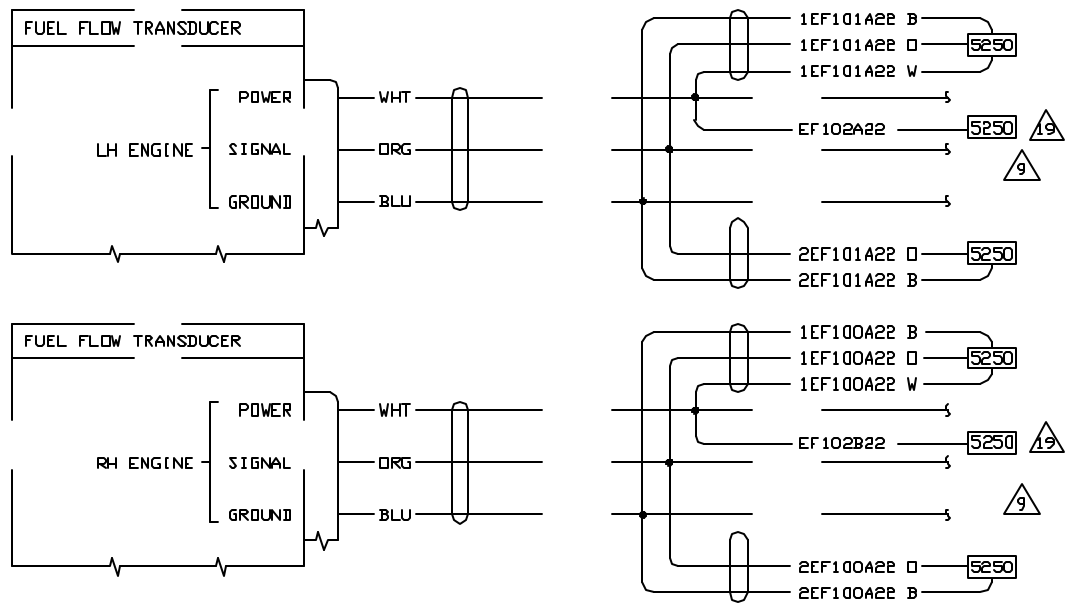

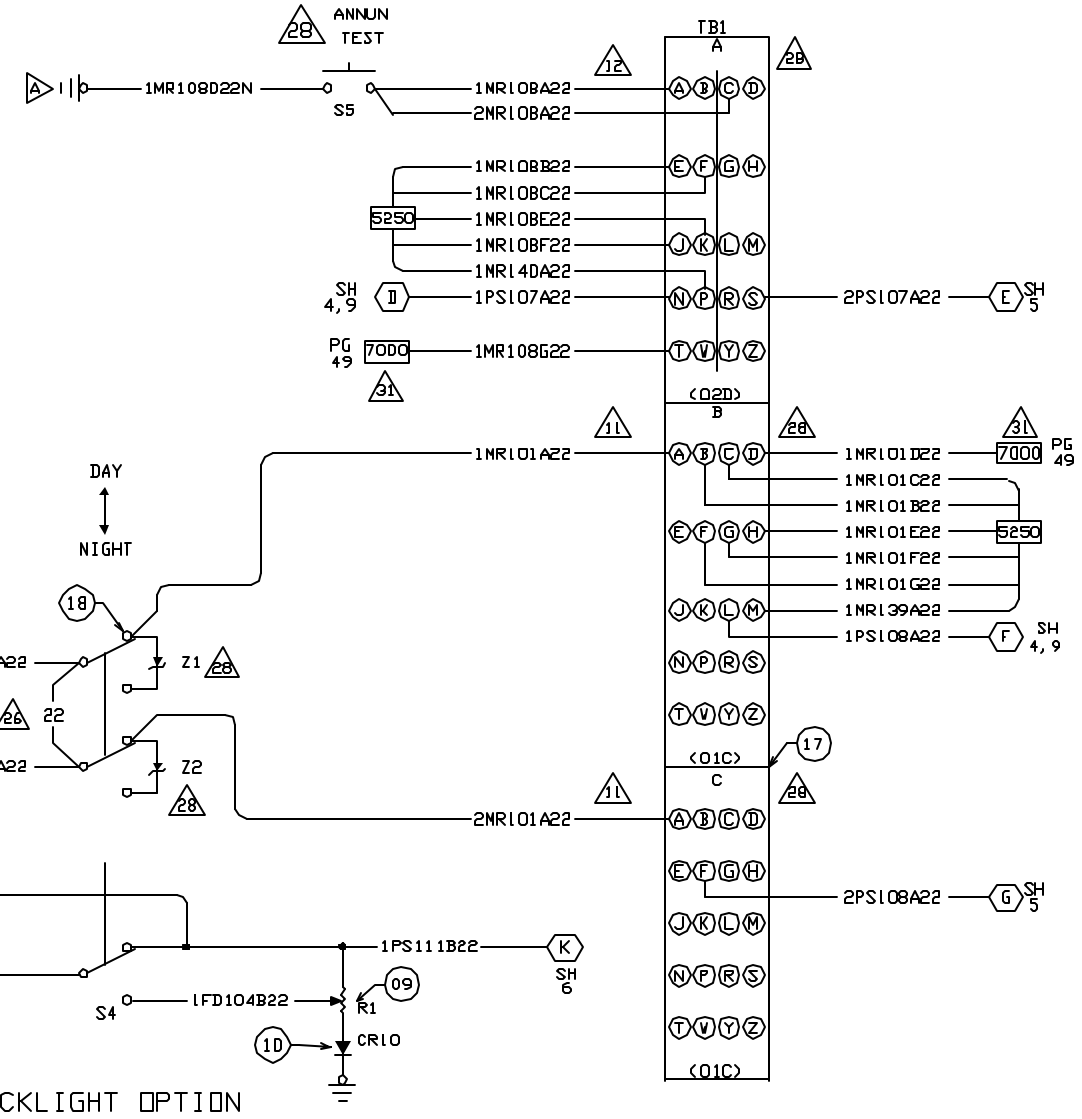

BACKLIGHT OPTION

OPTIONAL REVERSE LOGIC GEAR DOWN AND LOCK CIRCUIT

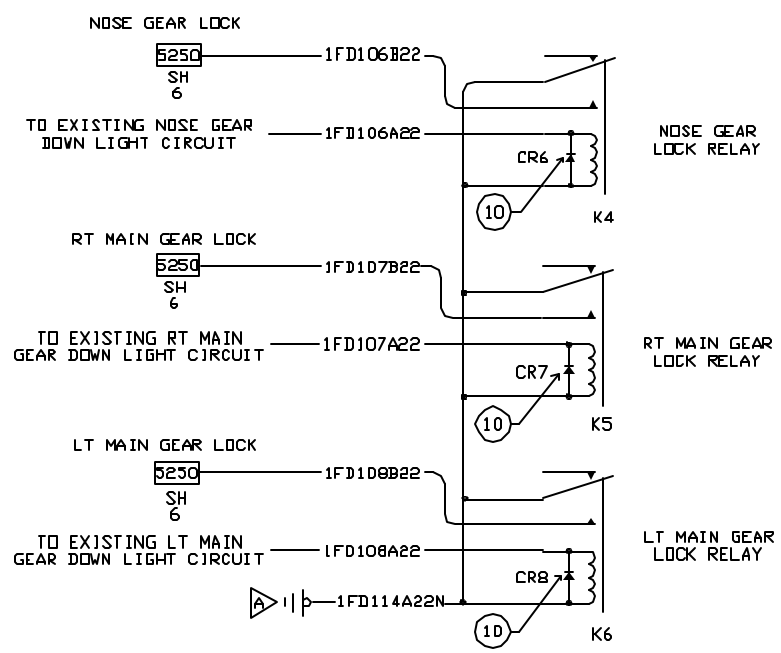

NOTES: RELAYS CAN BE EITHER INDIVIDUAL OR AS PART OF A RELAY ASSEMBLY BOX.

CONNECT TO EXISTING AIRCRAFT GEAR DOWN AND LOCK CIRCUITRY.

ENSURE RELAY IS OF APPROPRATE VOLTAGE FOR CIRCUIT.

IF AIRCRAFT HAS ONLY ONE DOWN AND LOCK LIGHT CIRCUIT, USE NOSE RELAY ONLY.

NOTES: SEE SHEET 1.
PERMANENT NOTE OR TWE PAGE APPLIES

Wulfsberg Electronics
A Chelton Group Company

SIZE	CAGE CODE	DOCUMENT NO.	REV.
B	1B7G3	702-045251	L
SCALE = NONE			SHEET = 8 OF 9

DWG NO. 702-045251 8 L

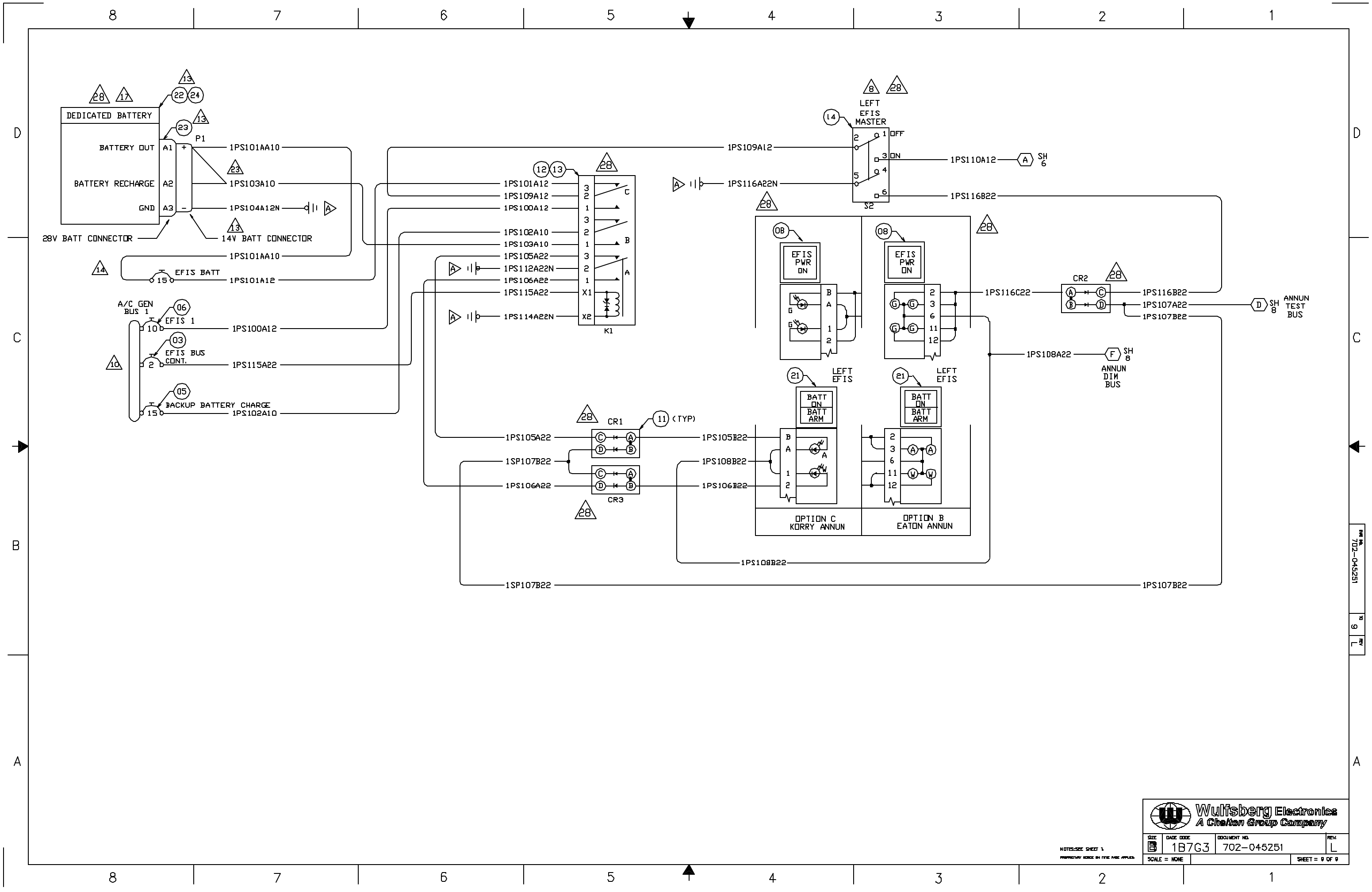
DEDICATED BATTERY
BATTERY OUT
BATTERY RECHARGE
GND
P1
28V BATT CONNECTOR
14V BATT CONNECTOR
1PS101AA10
1PS103A10
1PS104A12N
EFIS BATT
1PS101A12
A/C GEN BUS 1
EFIS 1
EFIS BUS CONT.
BACKUP BATTERY CHARGE
1PS100A12
1PS115A22
1PS102A10
1PS109A12
1PS116A22N
1PS100A12
1PS102A10
1PS103A10
1PS105A22
1PS112A22N
1PS106A22
1PS114A22N
K1
LEFT EFIS MASTER
OFF
ON
S2
1PS110A12
SH 6
1PS116B22
EFIS PWR ON
1PS116C22
CR2
1PS107A22
1PS107B22
SH 8
ANNUN TEST BUS
1PS108A22
ANNUN DIM BUS
LEFT EFIS
BATT ON
BATT ARM
CR1
(TYP)
1PS105A22
1SP107B22
1PS106A22
CR3
1PS105B22
1PS108B22
1PS106B22
OPTION C KORRY ANNUN
OPTION B EATON ANNUN
1PS108B22
1SP107B22
1PS107B22
Wulfsberg Electronics
A Chelton Group Company
SIZE B
DADE CODE 1B7G3
DOCUMENT NO. 702-045251
REV. L
SCALE = NONE
SHEET = 9 OF 9
NOTES:SEE SHEET 1.
PROPRIETARY NOTICE ON FIRE PAGE APPLIES.
DWG NO. 702-045251
TO 9
REV L