NOTES:

(1) UNLESS NOTED OTHERWISE ALL NEW WIRE TO MEET MIL-W-22759/16 OR LATER REVISION. ALL SHIELDED WIRE TO BE MIL-C-27500E WITH SHIELDS TYPE (T) AND JACKETS TYPE (14). INSTALL WIRING FOLLOWING CHELTON INSTRUCTIONS PER DOCUMENT 150-045264 . FOR ADDITIONAL ROUTING, BONDING AND GROUNDING DETAILS REF: AC43-13-1B CHAPTER 11, SECTIONS 9,10,11,& 15.

(2) GROUND NOTES

A DC GND — C SIGNAL GND
B AC GND — D AIRFRAME & SHIELD GND
XX — CHASSIS GND

GROUNDS TO BE AS SHORT AS POSSIBLE UNLESS OTHERWISE INDICATED. GROUNDS UNDER 6 INCHES IN LENGTH DO NOT REQUIRE A WIRE NUMBER. SHIELD PREPARATION SHOULD NOT EXCEED 3 INCHES FROM CONNECTOR. SHIELD GROUNDS MAY BE ACCOMPLISHED BY DAISY CHAINING. SPLICING OR INDIVIDUALLY GROUNDING SHIELD TO APPROPRIATE GND DEVICE.

(3) XXXX DENOTES REFERENCE TO APPLICABLE DWG.

(4) ⬡ REFERS TO LIKE LETTER IN SYMBOL THIS DWG.

(5) ALL WIRES 22AWG UNLESS OTHERWISE SPECIFIED.

(6) — — — DENOTES EXISTING AIRCRAFT WIRING OR COMPONENT.

(7) — · — DENOTES OPTIONAL EQUIPMENT.

(8) SWITCHES TO BE LOCATED NEAR EFIS INDICATOR.

(9) WARN AUDIO IS TO BE CONNECTED TO AN UNMUTED AUDIO FUNCTION OF COCKPIT AUDIO.

(10) SIGNAL TYPE TO BE DETERMINED AT TIME OF INSTALLATION. CONNECT WIRING AS NEEDED. DO NOT CONNECT WIRING TO BOTH SIGNAL TYPES.

(11) LOCATE KEYBOARD CONNECTOR IN A CONVENIENT LOCATION FOR EFIS CHECKOUT AND UPDATING.

(12) A/C PANEL LIGHTING REFERENCE VOLTAGE (28,14 OR 5 VOLTS) WILL BE INSTALLED ON 1P3, PIN 4. THE DIM VOLTAGE WILL BE INSTALLED ON 1P3, PIN 11.

(13) OPTIONAL UNIT NOT INSTALLED IN ALL CONFIGURATIONS.

(14) CROSSBOW AHRS-500 IS REQUIRED IF USING LITEF LCR-92 AHRS.

(15) REFER TO CHELTON FLIGHT SYSTEMS FIELD SERVICE NOTICE: EFIS-II INSTALLATION FOR ANNUNCIATED SWITCH OPTION

(16) OMIT IF SYSTEM IS BEING INSTALLED IN A FIXED GEAR AIRCRAFT.

(17) CONFIGURATIONS NOT LISTED ON DRAWING CONFIGURATION TABLE SHALL BE ASSESSED BY FAA FOR REGULATORY COMPLIANCE TO XX.1309, XX.1311, XX.1353.

(18) INSTALL S9501 IN THE PILOTS CONTROL WHEEL OR INSTRUMENT PANEL AND IDENTIFY AS 'AUDIO MUTE'.

(19) OPTIONAL EQUIPMENT FOR AIRCRAFT TRAVELING AT AIRSPEEDS ABOVE 250 KTS INDICATED.

(20) CONNECT TO EXISTING AIRCRAFT SYSTEM AS SHOWN IN VENDOR'S MANUAL.

(21) FOR SINGLE ENGINE AIRCRAFT, USE LEFT FUEL FLOW ONLY.

(22) FOR SYSTEM CONFIGURATION REFER TO CHILTON FLIGHT FLIGHT SYSTEM DOCUMENT NO. 150-045264.

(23) SMALL PARTS AND ELECTRICAL COMPONENTS REQUIRED FOR INSTALLATION THAT ARE NOT SPECIFICALLY CALLED OUT IN PARTS LIST, SHALL MEET THE REQUIREMENTS FOR AEROSPACE USE AS 'ACCEPTABLE PARTS' OR 'STANDARD PARTS'. SELECTION OF THESE PARTS SHALL BE IN ACCORDANCE WITH GUIDANCE PROVIDED IN FAA ADVISORY CIRCULAR 20-62D DATED 5/24/96 (OR LATER REVISION)

(24) GPS INSTALLATION KIT CONSIST OF THE FOLLOWING:

M24308/2-3F	CONNECTOR
M39029/63-368	SOCKETS
745584-3	SLIDE LATCH
207345-1	BACKSHELL
225554-6	TNC RT ANGLE CONNECTOR
225550-6	TNC STRAIGHT CONNECTOR

(25) SHEILD TERMINATION AS PER CHELTON FLIGHT SYSTEM DOCUMENT NO. 100-045242 EFIS II CABLING AND TERMINATION PROCESS. DNC NO. W2438

(26) LOW ALT SWITCH IS INSTALLED IN HELICOPTERS ONLY.

(27)

(28) USE LEFT FUEL FLOW POWER FOR DUAL ADC INSTALLATION

(29) USE OF MIL-C27500 TWISTED SHIELDED WIRE FOR DESCRETED LINES IS PERMISSIBLE. GND SHIELD AT CONNECTOR END.

(30) CABLES ARE PART OF THE IDU RACK ASSEMBLY.

(31) XX = LENGTH IN INCHES.

(32) BKLT REFERENCE VOLTAGE MUST BE SWITCHED OFF FOR DAY OPERATIONS. CONNECT BKLT CONTROL TO EXISTING DIMMER CONTROL OUTPUT.

(33) SEE INSTALLATION GUIDE 150-045264 FOR SOFTWARE CONFIGURATION CARD INSTALLATION.

(34) WIRING CODE

1 FD 100 A 22 N W

UNIT NUMBER
1 - #1 SYSTEM
2 - #2 SYSTEM
3 - #3 SYSTEM
4 - #4 SYSTEM

CIRCUIT FUNCTION
SEE TABLE 1

WIRE NUMBER

WIRE COLOR
W - WHITE
B - BLUE
O - ORANGE
BLK - BLACK
R - RED

GROUND

WIRE GUAGE

WIRE SEGMENT

TABLE 1

CA - AUTOPILOT	LI - BACK LIGHTING
EF - FUEL FLOW SYS	MR - SWITCHING SYS
FA - AIR DATA SYS	RD - ADF SYS
FD - EFIS SYS	RM - MARKER SYS
FF - FLIGHT DIRECTOR SYS	RG - ADS-B
FG - AHRS SYS	RN - VHF NAV SYS
FN - GPS SYS	SA - RADIO ALTIMETER
PS - POWER BUS	SS - STORM SCOPE SYS
	ST - TCAD SYS

REVISIONS

REV	DESCRIPTION	DATE	APPROVED	APPROVED
D	INITIAL WULFSBERG RELEASE PER DCN W1894	12/19/02	R. DURALL	V. Wallace
E	UPDATE PART NUMBERS PER DCN W2610	12/23/02	R. DURALL	V. Wallace
F	UPDATE PART NUMBERS UPDATE WIRING LABELS REMOVE SH 15 PER W2657	01/30/03	R. DURALL	V. Wallace
G	UPDATE PART NUMBERS PER DCN W2696	02/19/03	R. DURALL	V. Wallace
H	MODIFIED ADC WIRING FOR DUAL ADC INSTALLATION PER DCN W2752	03/28/03	R. DURALL	V. Wallace
J	UPDATE WIRE NUMBERS AND ADD SWITCH OPTIONS PER DCN W2800	05/20/03	R. DURALL	V. Wallace
K	UPDATE IDU BACKLIGHT CIRCUIT OPTION PER DCN W2864	05/29/03	R. DURALL	V. Wallace
L	ADDED ARINC 429 INTERFACE OPTIONS PER DCN W3061	09/12/03	R. DURALL	V. Wallace
M	ADDED COM23 TX, EFIS VALID CORRECTED WIRE LABELS PER DCN W3674	05/27/04	R. DURALL	R. TALKEN

DRAWING CONFIGURATION TABLE

	SENSORS			DISPLAYS				PAGES OF THIS DWG USED														
CONFIG	ADC	GPS	AHRS	PFD	MFD1	MFD2	MFD3	1	2	3	4	5	6	7	8	9	10	11	12	13	14	15
101	1	1	1	0	1	0	0	X	X	X	X	X	X									X
102	1	1	1	1	1	0	0	X	X	X	X	X	X	X								X
103	2	2	2	1	1	0	0	X	X	X	X	X		X			X	X	X	X	X	X
104	1	1	1	1	1	1	0	X	X	X	X	X	X	X	X							X
105	2	2	2	1	1	1	0	X	X	X	X	X		X	X		X	X	X	X	X	X
106	1	1	1	1	1	1	1	X	X	X	X	X	X	X	X	X						X
107	2	2	2	1	1	1	1	X	X	X	X	X		X	X	X	X	X	X	X	X	X

X = PAGES USED FOR THIS CONFIGURATION

THIS DOCUMENT CONTAINS PROPRIETARY INFORMATION OF WULFSBERG ELECTRONICS NEITHER RECEIPT NOR POSSESSION THEREOF CONFERS ANY RIGHT TO REPRODUCE OR USE, OR DISCLOSE, IN WHOLE OR IN PART, ANY SUCH INFORMATION WITHOUT WRITTEN AUTHORIZATION FROM WULFSBERG ELECTRONICS.

THIRD ANGLE PROJECTION

NEXT ASSEMBLY | FINAL ASSEMBLY

APPLICATION

TOLERANCES: (ALL DIMENSIONS ARE IN INCHES, UNLESS OTHERWISE SPECIFIED.)
FRACTIONS ±X DECIMALS .XX± .XXX± ANGLES ±X°

MATERIAL

FINISH

DO NOT SCALE DRAWING

TYPED SIGNATURES INDICATE APPROVAL. HANDWRITTEN SIGNATURE APPROVAL OF THIS DOCUMENT IS ON FILE AT WULFSBERG ELECTRONICS, PRESCOTT, ARIZONA.

APPROVALS		DATE
DRAWN	Randy Harper	07/25/02
ENGINEER	Kevin Campros	07/25/02
CHECKED	Buddy Jackson	07/25/02
ISSUED	Vern Wallace	12/19/02

CHELTON FLIGHT SYSTEMS

W/D EFIS IDU INTERFACE

SIZE	CAGE CODE	DOCUMENT NO.	REV.
B	1B7G3	702-045250	M

SCALE = NONE | SHEET = 1 OF 15

DWG NO. 702-045250 SH. 1 REV. M

							ITEM	PART NO.	NOMENCLATURE	SPEC/VENDOR
							42			
							41			
							40			
							39			
							38			
							37			
							36			
							35			
							34			
							33			
							32			
							31			
							30			
1	1	-	-	-	-	-	29	310-045630-01	SCC NO4 (MFD3)	CHELTON
1	1	1	1	-	-	-	28	310-045629-01	SCC NO3 (MFD2)	CHELTON
1	1	1	1	1	1	-	27	310-045628-01	SCC NO2 (MFD1)	CHELTON
1	1	1	1	1	1	-	26	310-045626-01	SCC NO1 (PFD)	CHELTON
-	-	-	-	-	-	1	25	310-045625-01	SCC NOO (SINGLE IDU)	CHELTON
							24			
1	-	1	-	1	-	-	23	149-045264-03	INSTALL KIT, DUAL SENSOR	CHELTON
							22			
-	1	-	1	-	1	1	21	142185-XXXX	LCR-93	LITEF
							20			
2	1	2	1	2	1	1	19	8350-0062-XX	AHRS 500GA-202	CROSSBOW
							18			
AR	AR	AR	AR	AR	AR	AR	17	RG142/U (OR EQUIVALENT)	COAX CABLE	QPL
2	1	2	1	2	1	1	16	CI405-100	GPS ANTENNA	COMANT
2	1	2	1	2	1	1	15	1031-4200-01	GPS SENSOR INSTALLATION KIT	FREEFLIGHT
2	1	2	1	2	1	1	14	84100-01-0101	GPS SENSOR	FREEFLIGHT
							13			
							12			
2	1	2	1	2	1	1	11	681201A-1	TEMP PROBE KIT	SHADIN
2	1	2	1	2	1	1	10	962830A-1-S-8	ADC COMPUTER	SHADIN
							09			
AR	AR	AR	AR	AR	AR	AR	08	401-045515-05	TRAY, IDU 5-CONNECTOR	CHELTON
AR	AR	AR	AR	AR	AR	AR	07	401-045515-03	TRAY, IDU 3-CONNECTOR	CHELTON
2	2	AR	AR	1	1	AR	06	146-045520-01	NON-SLIP KIT ASSY	CHELTON
2	2	AR	AR	1	1	AR	05	310-045600-01	SLIP KIT ASSY	CHELTON
3	3	2	2	1	1	-	04	149-045264-02	INSTALL KIT, MFD	CHELTON
1	1	1	1	1	1	1	03	149-045264-01	INSTALL KIT, PFD	CHELTON
4	4	3	3	2	2	1	02	401-045500-XXXX	IDU	CHELTON
-107	-106	-105	-104	-103	-102	-101	01	-	EFIS IDU INTERFACE	-

24

NOTES: SEE SHEET 1.

PROPRIETARY NOTICE ON TITLE PAGE APPLIES.

CHELTON FLIGHT SYSTEMS

SIZE	CAGE CODE	DOCUMENT NO.	REV.
B	1B7G3	702-045250	M

SCALE = NONE

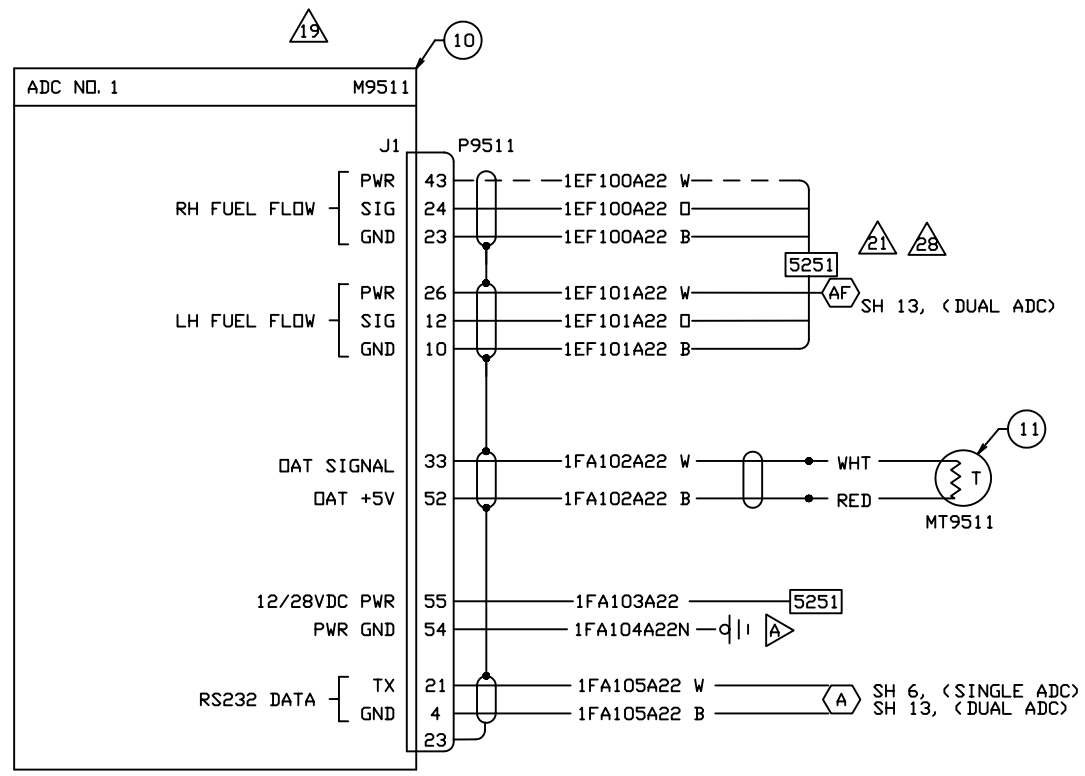

NOTES: SEE SHEET 1.

PROPRIETARY NOTICE ON TITLE PAGE APPLIES.

CHELTON FLIGHT SYSTEMS

SIZE	CAGE CODE	DOCUMENT NO.	REV.
B	1B7G3	702-045250	M
SCALE = NONE			SHEET = 3 OF 15

DWG NO. 702-045250 SH 3 REV M

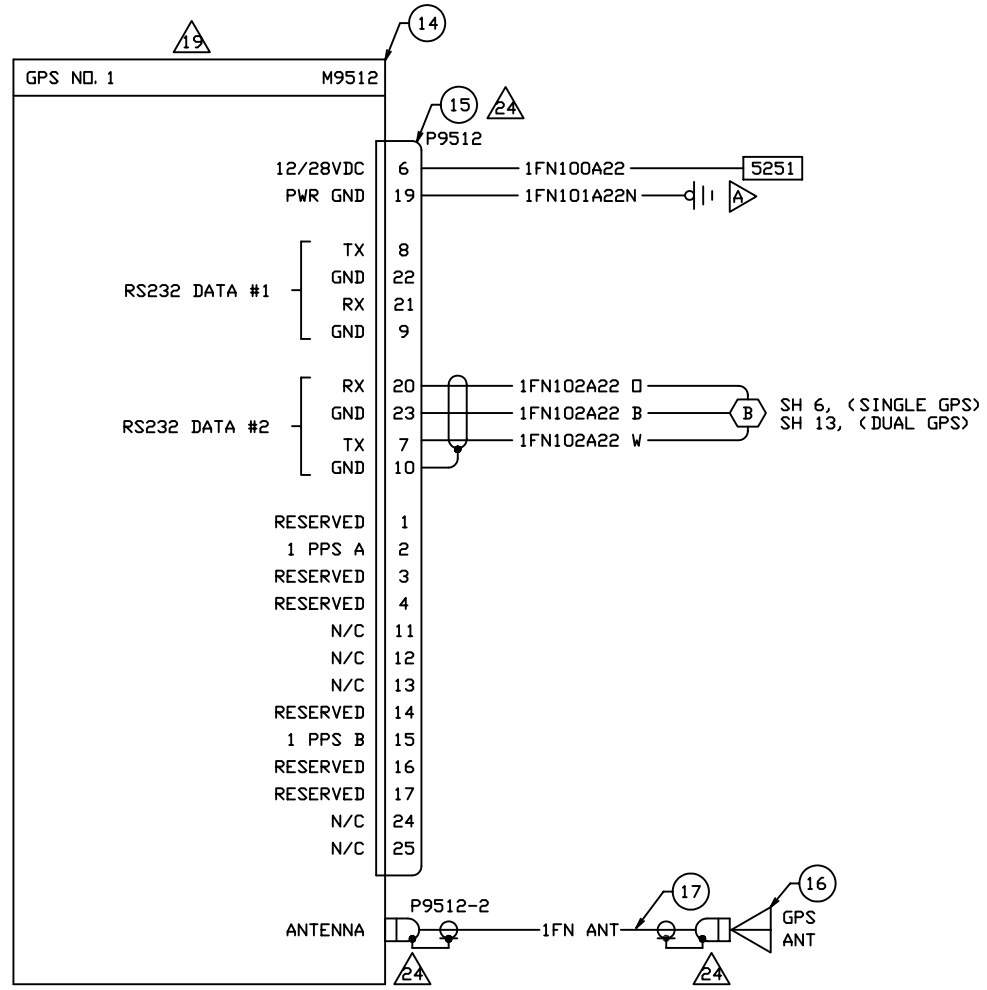

NOTES: SEE SHEET 1.

PROPRIETARY NOTICE ON TITLE PAGE APPLIES.

CHELTON
FLIGHT SYSTEMS

SIZE	CAGE CODE	DOCUMENT NO.	REV.
B	1B7G3	702-045250	M
SCALE = NONE			SHEET = 4 OF 15

DWG NO. 702-045250 SH. 4 REV. M

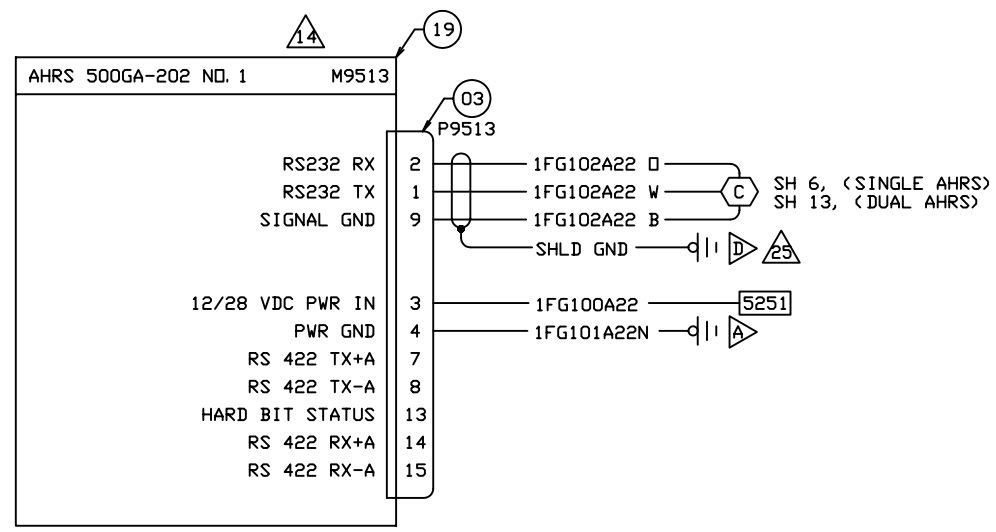

NOTES: SEE SHEET 1.

PROPRIETARY NOTICE ON TITLE PAGE APPLIES.

CHELTON FLIGHT SYSTEMS

SIZE	CAGE CODE	DOCUMENT NO.	REV.
B	1B7G3	702-045250	M
SCALE = NONE			SHEET = 5 OF 15

DWG NO. 702-045250 SH 5 REV M

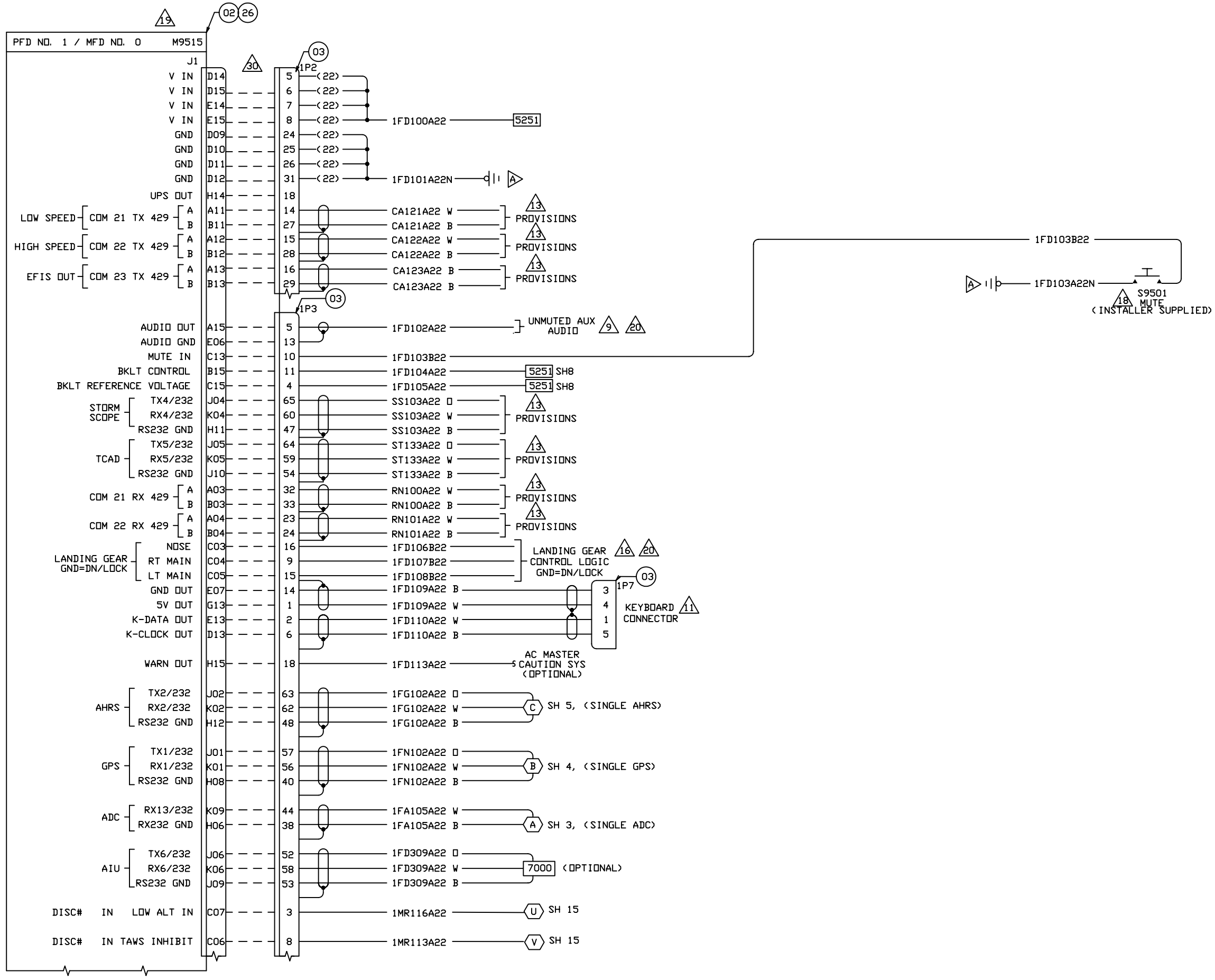

NOTES: SEE SHEET 1.

PROPRIETARY NOTICE ON TITLE PAGE APPLIES.

CHELTON FLIGHT SYSTEMS

SIZE	CAGE CODE	DOCUMENT NO.	REV.
B	1B7G3	702-045250	M

SCALE = NONE SHEET = 6 OF 15

DWG NO. 702-045250 SH. 6 REV. M

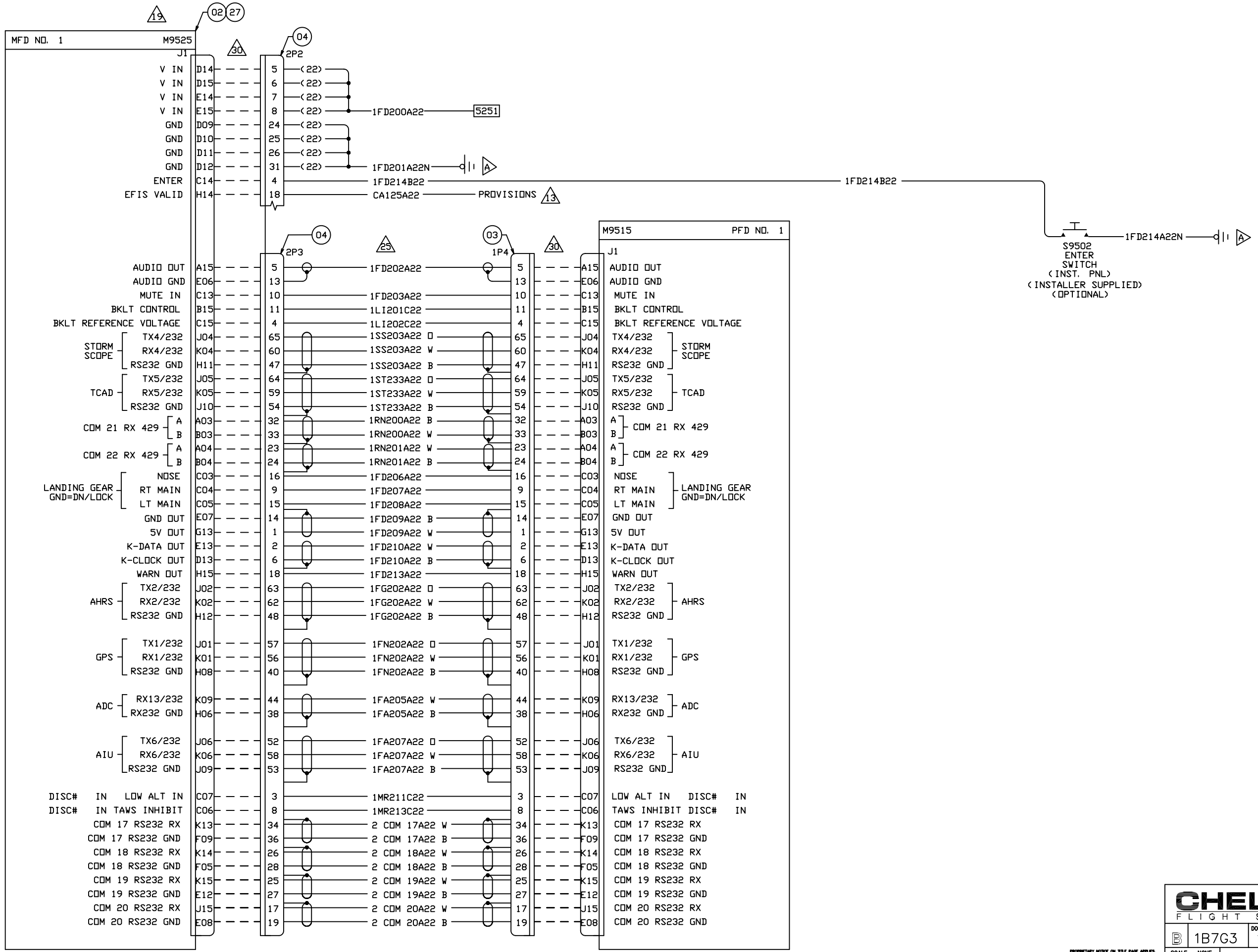

CHELTON FLIGHT SYSTEMS

B	1B7G3	DOCUMENT NO. 702-045250	REV. M
SCALE = NONE			SHEET = 7 OF 15

PROPRIETARY NOTICE ON TITLE PAGE APPLIES.

DWG NO. 702-045250 SH. 7 REV. M

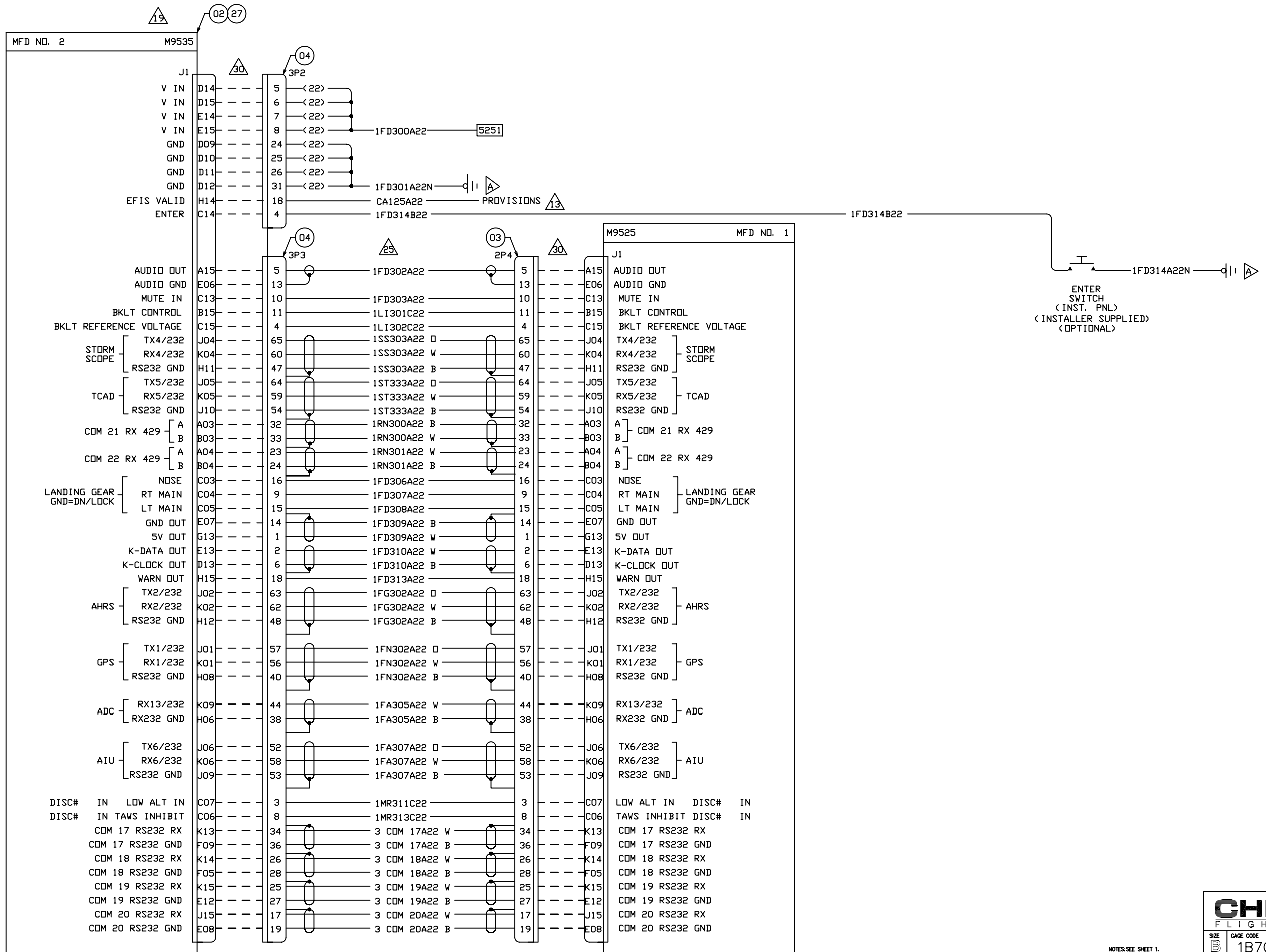

NOTES: SEE SHEET 1.

PROPRIETARY NOTICE ON TITLE PAGE APPLIES.

CHELTON FLIGHT SYSTEMS

SIZE	CAGE CODE	DOCUMENT NO.	REV.
B	1B7G3	702-045250	M

SCALE = NONE

DWG NO. 702-045250 SH. 8 REV. M

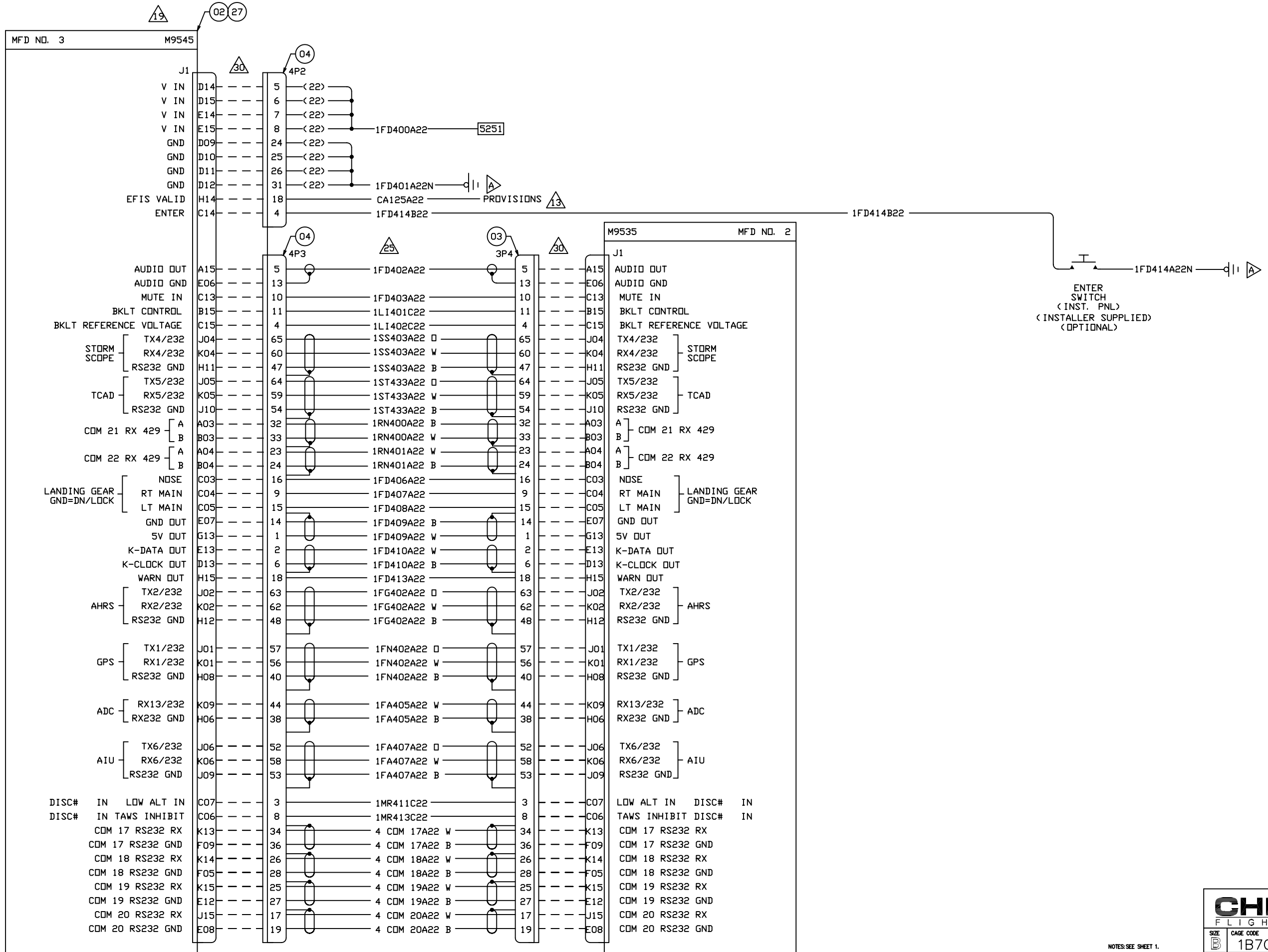

NOTES: SEE SHEET 1.

PROPRIETARY NOTICE ON TITLE PAGE APPLIES.

CHELTON FLIGHT SYSTEMS

SIZE	CAGE CODE	DOCUMENT NO.	REV.
B	1B7G3	702-045250	M

SCALE = NONE

DWG NO. 702-045250 SH 9 REV M

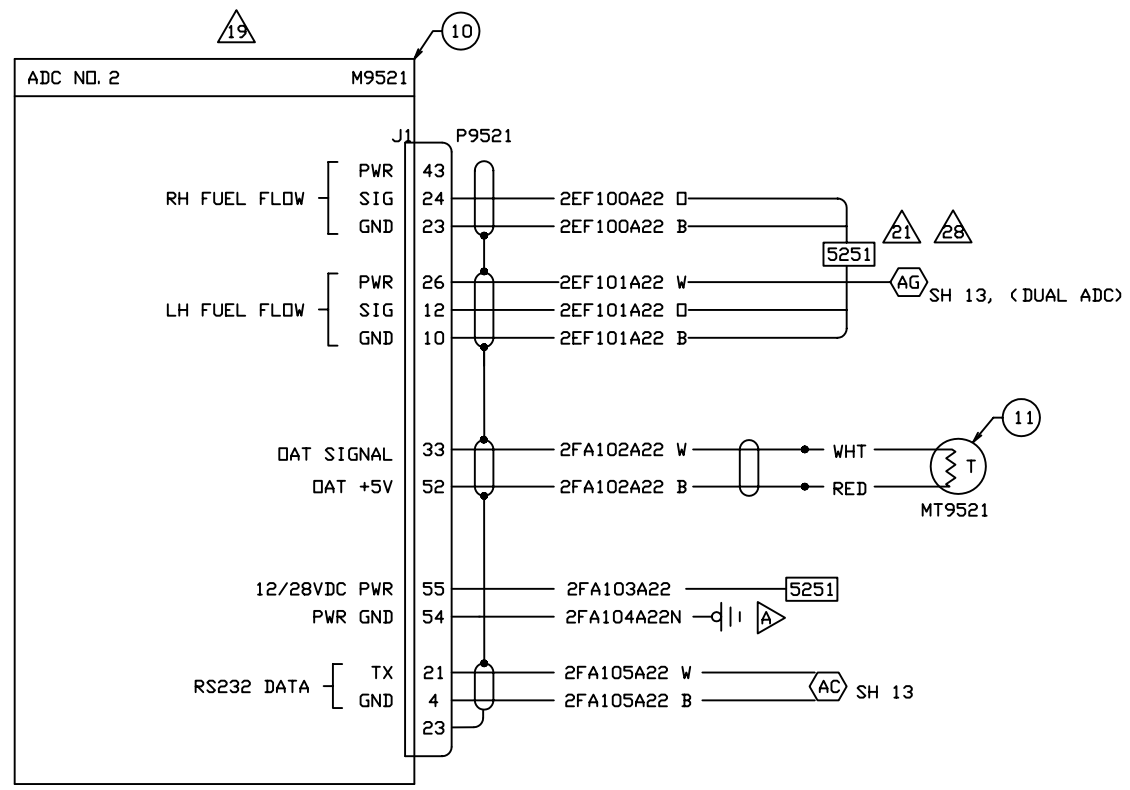

NOTES: SEE SHEET 1.

PROPRIETARY NOTICE ON TITLE PAGE APPLIES.

CHELTON FLIGHT SYSTEMS

SIZE	CAGE CODE	DOCUMENT NO.	REV.
B	1B7G3	702-045250	M

SCALE = NONE | SHEET = 10 OF 15

DWG NO. 702-045250 SH 10 REV M

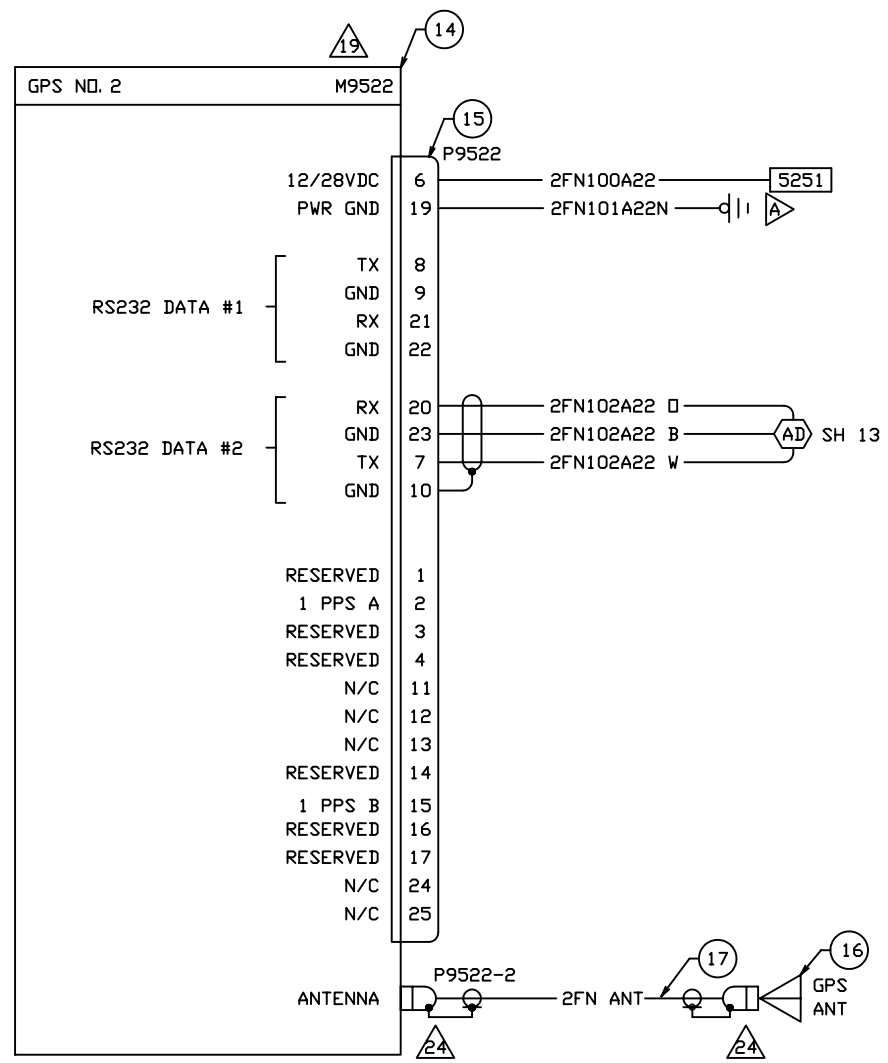

NOTES: SEE SHEET 1.

PROPRIETARY NOTICE ON TITLE PAGE APPLIES.

CHELTON FLIGHT SYSTEMS

SIZE	CAGE CODE	DOCUMENT NO.	REV.
B	1B7G3	702-045250	M

SCALE = NONE

DWG NO. 702-045250 SH 11 REV M

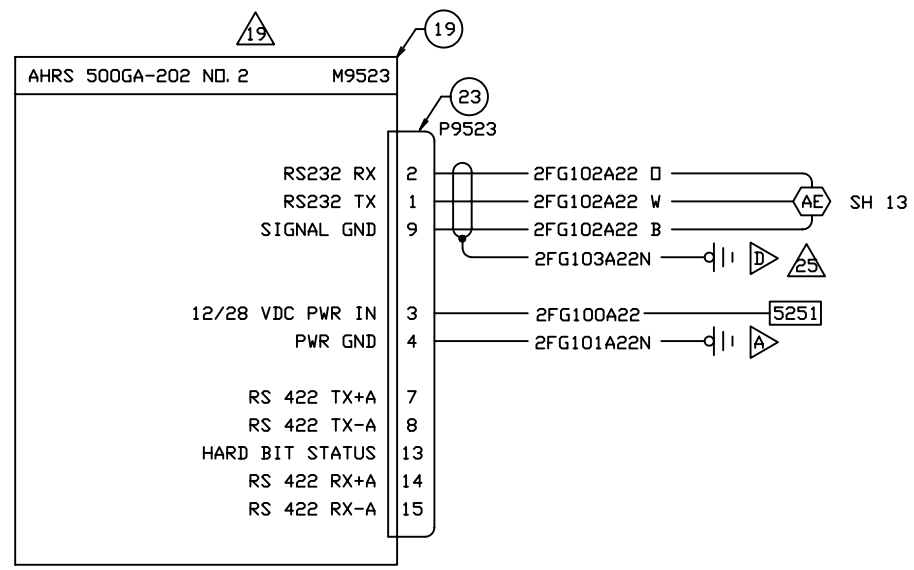

NOTES: SEE SHEET 1.

PROPRIETARY NOTICE ON TITLE PAGE APPLIES.

CHELTON FLIGHT SYSTEMS

SIZE	CAGE CODE	DOCUMENT NO.	REV.
B	1B7G3	702-045250	M

SCALE = NONE | SHEET = 12 OF 15

DWG NO. 702-045250 SH 12 REV. M

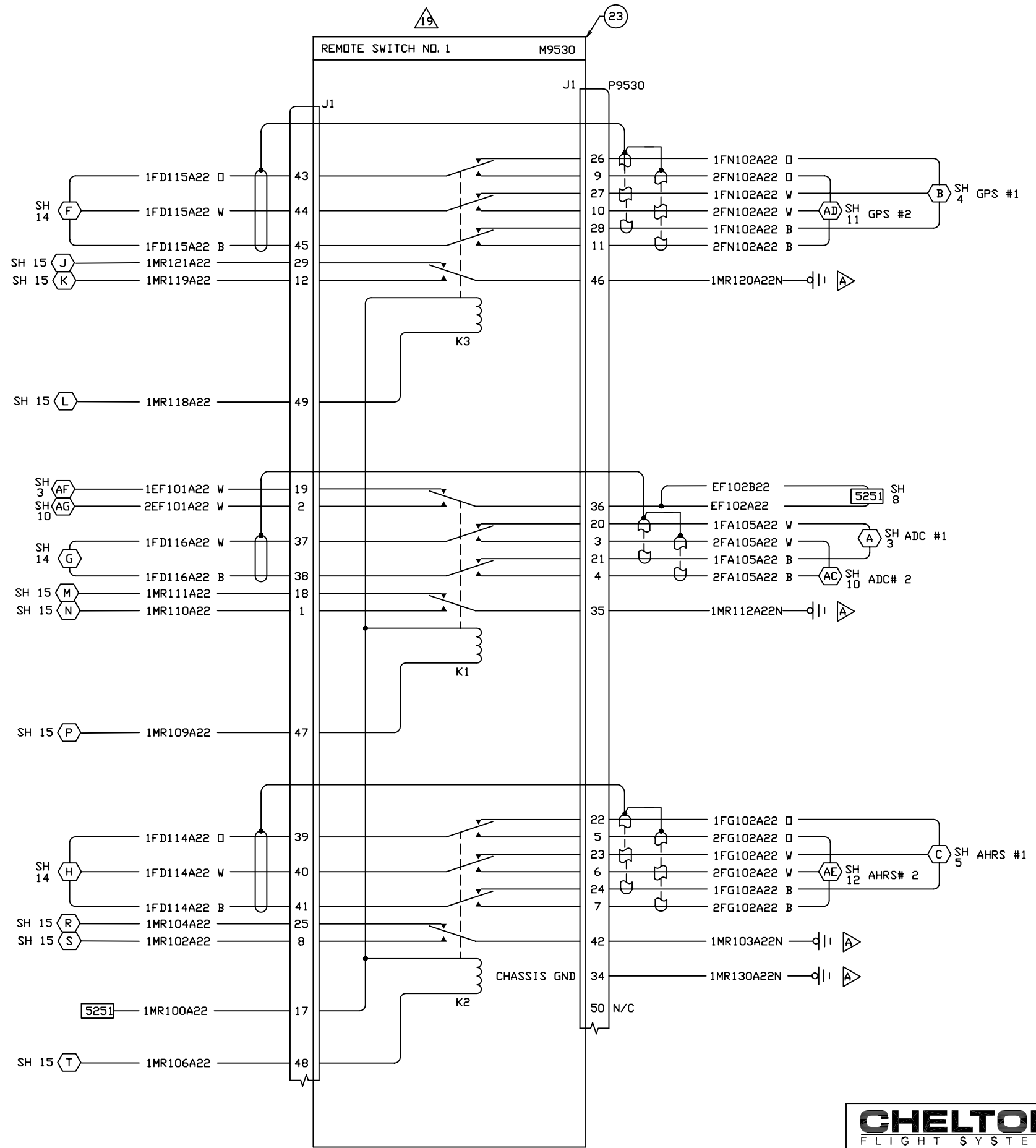

NOTES: SEE SHEET 1.

PROPRIETARY NOTICE ON TITLE PAGE APPLIES.

CHELTON FLIGHT SYSTEMS

SIZE	CAGE CODE	DOCUMENT NO.	REV.
B	1B7G3	702-045250	M
SCALE = NONE			SHEET = 13 OF 15

DWG NO. 702-045250 SH 13 REV M

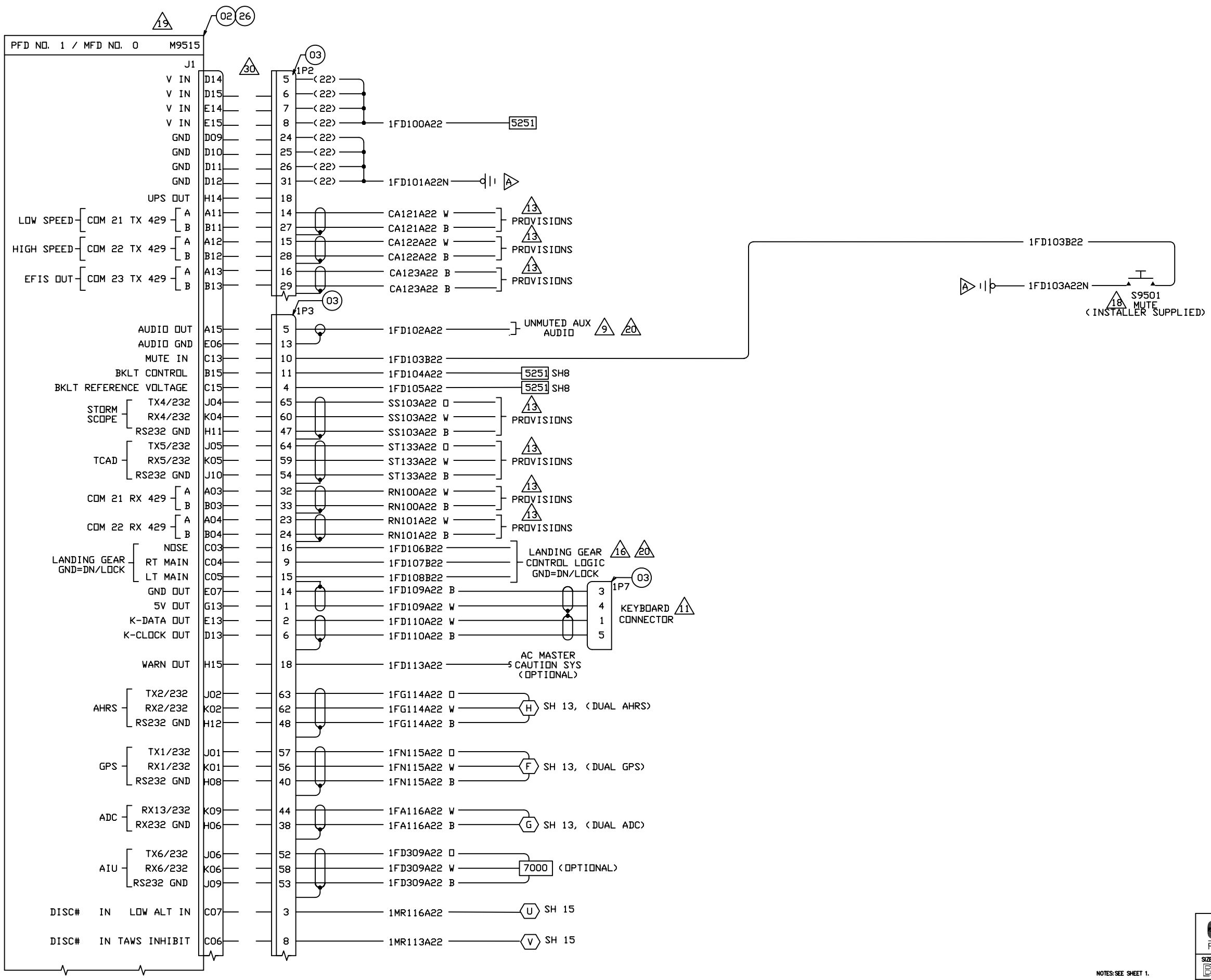

NOTES: SEE SHEET 1.

PROPRIETARY NOTICE ON TITLE PAGE APPLIES.

CHELTON FLIGHT SYSTEMS

SIZE	CAGE CODE	DOCUMENT NO.	REV.
B	1B7G3	702-045250	M
SCALE = NONE			SHEET = 14 OF 15

DWG NO. 702-045250 SH. 14 REV. M

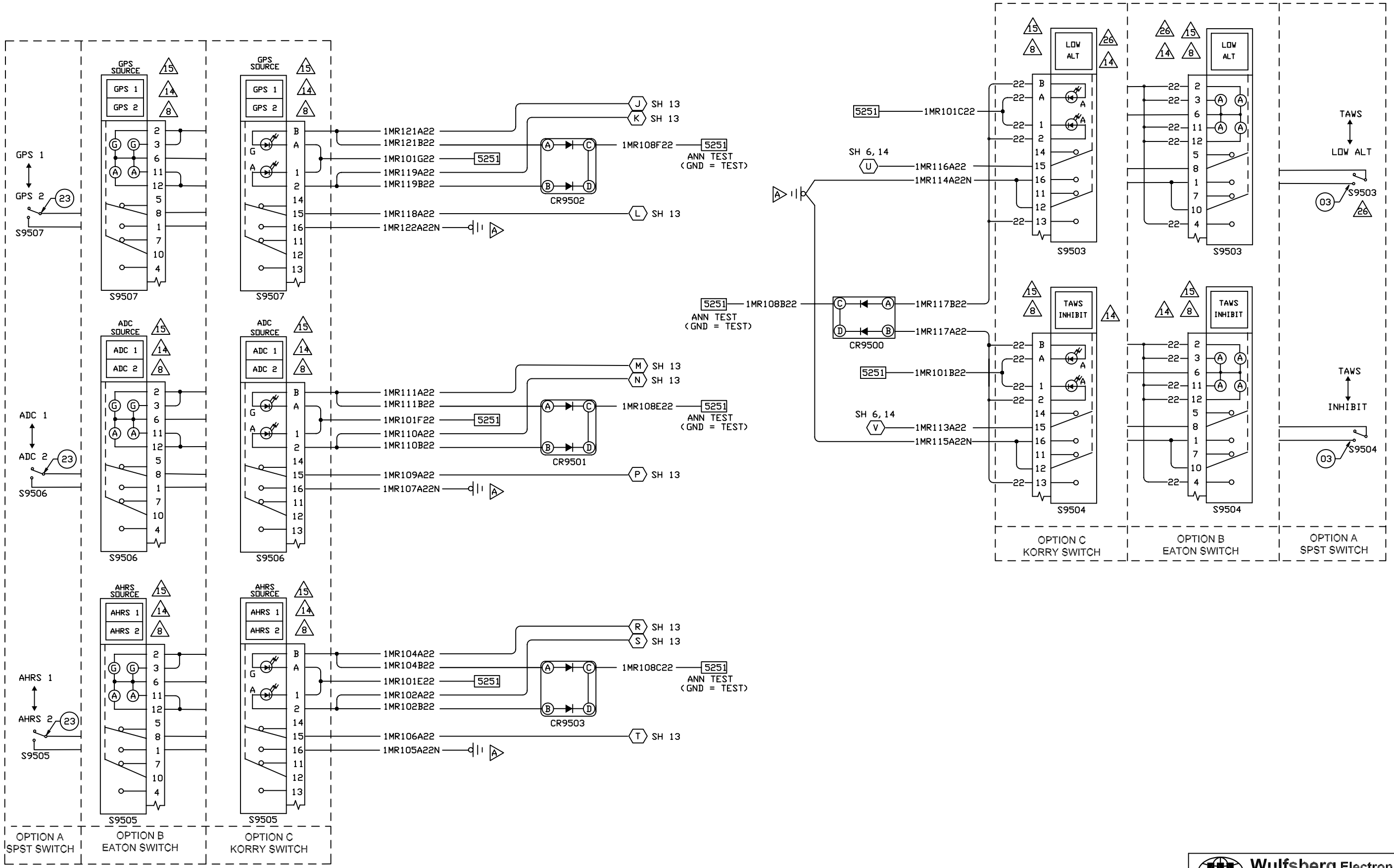

NOTES: SEE SHEET 1.

PROPRIETARY NOTICE ON TITLE PAGE APPLIES.

Wulfsberg Electronics
A Chelton Group Company

SIZE	CAGE CODE	DOCUMENT NO.	REV.
B	1B7G3	702-045250	M
SCALE = NONE			SHEET = 15 OF 15

DWG NO. 702-045250 SH 15 REV. M